FO-50360-L

CW-B0108

REV	DOCUMENT	CHANGED BY	CHECK
A	0000825	CSL 8 JUL 03	SAV

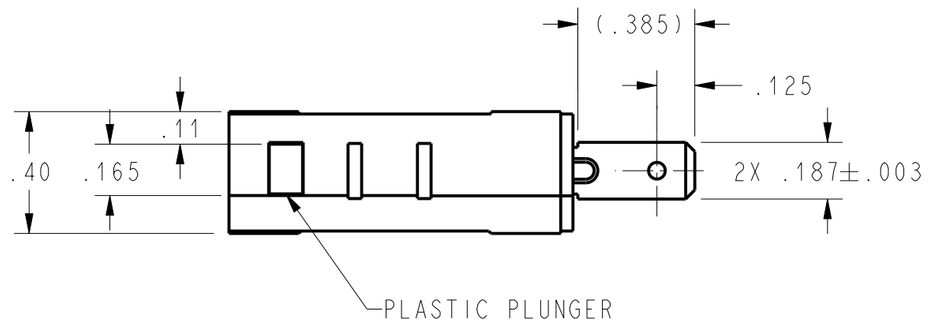

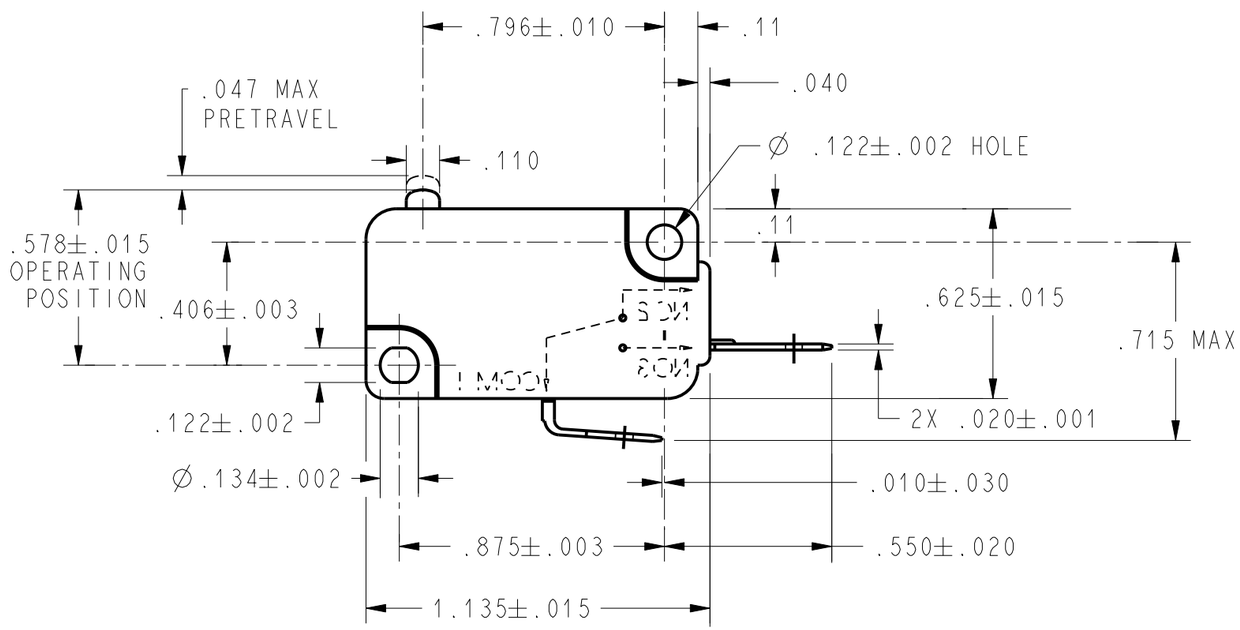

CHARACTERISTICS	
OPERATING FORCE	150 GRAMS MAX
RELEASE FORCE	25 GRAMS MIN
DIFFERENTIAL TRAVEL	.002-.010
OVERTRAVEL	.050 MIN
FREE POSITION	.625 MAX
RELEASE TRAVEL	.010 MIN

ELECTRICAL DATA

CONTACT ARRANGEMENT
S P N O

L162 5A 125, 250, 277 VAC
1/10HP 250 VAC

UNLESS OTHERWISE SPECIFIED TOLERANCES ARE: [X] US(inch) CUSTOMARY [ ] SI(mm) METRIC

NO PLACE	X	±.040	±1
ONE PLACE	.X	±.030	±0,4
TWO PLACE	.XX	±.015	±0,15
THREE PLACE	.XXX	±.005	±
ANGLES		±	±

RAW MATERIAL-COMMERCIAL STANDARD

THIRD ANGLE PROJECTION

DRAWN	C S L	8 JUL 03
CHECK	S A V	8 JUL 01

THIS DRAWING COVERS A PROPRIETARY ITEM AND IS THE PROPERTY OF HONEYWELL. THIS DRAWING IS NOT TO BE COPIED OR USED WITHOUT THE PERMISSION OF HONEYWELL.

DIMENSIONS ARE TO BE MET BEFORE PROTECTIVE COATINGS ARE APPLIED

PTC 2D | ASME Y14.5M-1994

Honeywell

TITLE
SWITCH, BASIC

SIZE	DWG TYPE	DRAWING NAME	REV
B	I	V7-1A28D8	A

SCALE NONE | WEIGHT | SHEET 1 OF 1