# SI-8000W Series Surface-Mount, Separate Excitation Step-down Switching Mode

## ■Features

- Surface-mount package (SOP8)
- Output current: 0.6A
- High efficiency: 75 to 80%
- Requires only 4 discrete components
- Internally-adjusted phase correction and output voltage adjustment performed internally
- Built-in reference oscillator (60kHz)
- Built-in overcurrent and thermal protection circuits

## ■Absolute Maximum Ratings

| Parameter | Symbol | Ratings | Unit |
|---|---|---|---|
| DC Input Voltage | $V_{IN}$ | 35 | V |
| Power Dissipation | $P_D$ | 1 | W |
| Junction Temperature | $T_j$ | –30 to +125 | °C |
| Storage Temperature | $T_{stg}$ | –40 to +125 | °C |
| Thermal Resistance (Junction to 7-Pin Lead) | $\theta_{j\text{-}L}$ | 22 | °C/W |
| Thermal Resistance (Junction to Ambient Air)*1 | $\theta_{j\text{-}a}$ | 100 | °C/W |

*1: Glass-epoxy board of 40 × 40mm (copper laminate area 4.3%)

## ■Applications

- Power supplies for telecommunication equipment
- Onboard local power supplies

## ■Recommended Operating Conditions

| Parameter | Symbol | Ratings | | Unit |
|---|---|---|---|---|
| | | SI-8033W | SI-8050W | |
| DC Input Voltage Range | $V_{IN}$ | 5.3 to 28 | 7 to 33 | V |
| Output Current Range | $I_O$ | 0 to 0.6 | | A |
| Operating Junction Temperature Range | $T_{jop}$ | –30 to +125 | | °C |

## ■Electrical Characteristics

($T_a$=25°C)

| Parameter | Symbol | Ratings | | | | | | Unit |
|---|---|---|---|---|---|---|---|---|
| | | SI-8033W | | | SI-8050W | | | |
| | | min. | typ. | max. | min. | typ. | max. | |
| Output Voltage | $V_O$ | 3.17 | 3.30 | 3.43 | 4.80 | 5.00 | 5.20 | V |
| | Conditions | $V_{IN}$=15V, $I_O$=0.3A | | | $V_{IN}$=20V, $I_O$=0.3A | | | |
| Efficiency | $\eta$ | | 75 | | | 80 | | % |
| | Conditions | $V_{IN}$=15V, $I_O$=0.3A | | | $V_{IN}$=20V, $I_O$=0.3A | | | |
| Oscillation Frequency | f | | 60 | | | 60 | | kHz |
| | Conditions | $V_{IN}$=15V, $I_O$=0.3A | | | $V_{IN}$=20V, $I_O$=0.3A | | | |
| Line Regulation | $\Delta V_{OLINE}$ | | 60 | 80 | | 80 | 100 | mV |
| | Conditions | $V_{IN}$=8 to 28V, $I_O$=0.3A | | | $V_{IN}$=10 to 30V, $I_O$=0.3A | | | |
| Load Regulation | $\Delta V_{OLOAD}$ | | 20 | 30 | | 30 | 40 | mV |
| | Conditions | $V_{IN}$=15V, $I_O$=0.1 to 0.4A | | | $V_{IN}$=20V, $I_O$=0.1 to 0.4A | | | |
| Temperature Coefficient of Output Voltage | $\Delta V_O/\Delta T_a$ | | ±0.5 | | | ±0.5 | | mV/°C |
| Ripple Rejection | $R_{REJ}$ | | 45 | | | 45 | | dB |
| | Conditions | f=100 to 120Hz | | | f=100 to 120Hz | | | |
| Overcurrent Protection Starting Current | $I_{S1}$ | 0.61 | | | 0.61 | | | A |
| | Conditions | $V_{IN}$=15V | | | $V_{IN}$=20V | | | |

## ■External Dimensions (SOP8)

(Unit : mm)

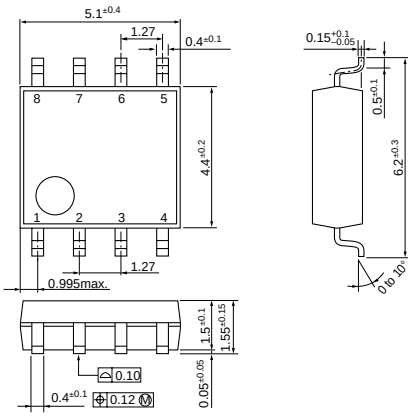


Pin Assignment
① $V_{IN}$
② N.C
③ SW
④ $V_{OS}$
⑤ GND
⑥ GND
⑦ GND
⑧ GND

Plastic Mold Package Type
Flammability: UL94V-0
Product Mass: Approx. 0.1g

## ■Block Diagram

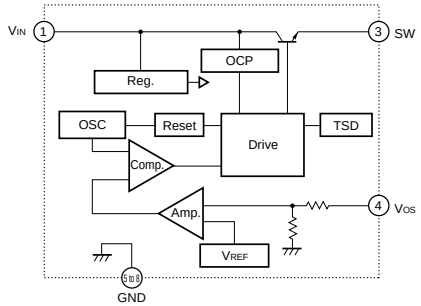


## ■Typical Connection Diagram

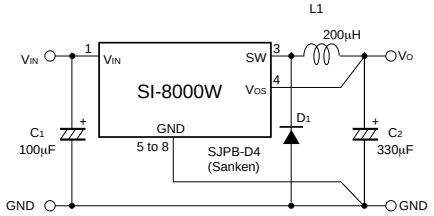


## ■Reference Data

**Copper Laminate Area vs. Power Dissipation**

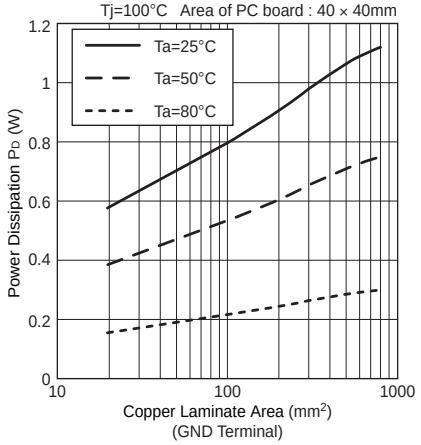

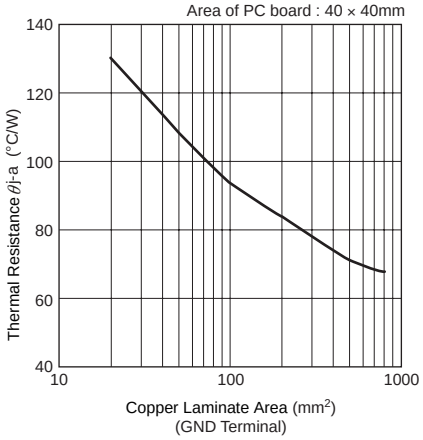
**Copper Laminate Area vs. Thermal Resistance $\theta_{j\text{-}a}$**