Honeywell

LIMIT SWITCH

CATALOGUE LISTING
GLS

CHART NO.
MTG-GL-195

MTG-GL-195

REPLACES

DRAWING NUMBER A018-185

ISSUE D

RELEASE NUMBER

REVISIONS

2	7/96	A018-262
3	12/96	A018-293
4	7/97	CO-000083
5	8/97	CO-000106
6	CO/395	I. WEIR X/98

FIG. 1

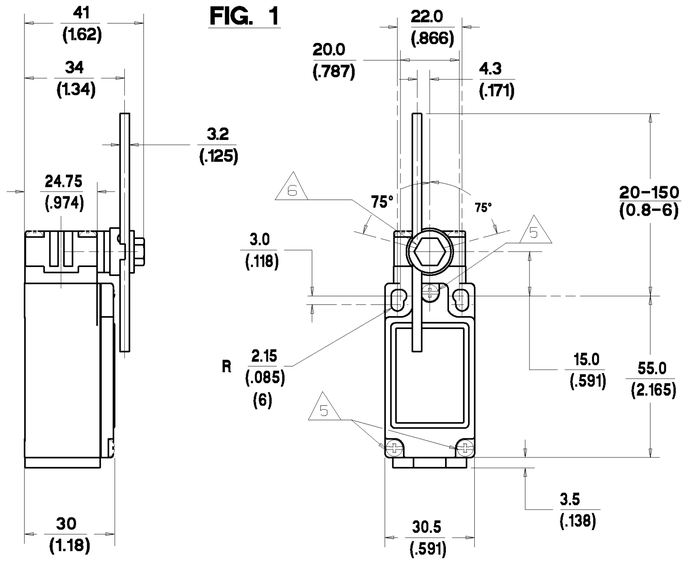

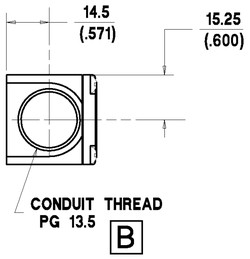

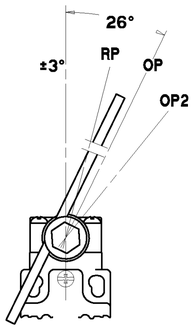

SNAP-ACTION CONTACTS	SLOW-ACTION CONTACTS (BREAK BEFORE MAKE)	SLOW-ACTION CONTACTS (MAKE BEFORE BREAK)	SLOW-ACTION CONTACTS (2 NORMALLY CLOSED)	CONTACT BLOCK DIAGRAM TERMINAL DESIGNATION TO EN 50013
13 14 Zb 21 22	21 22 Zb 13 14	21 22 Zb 13 14	11 12 2Y 21 22	

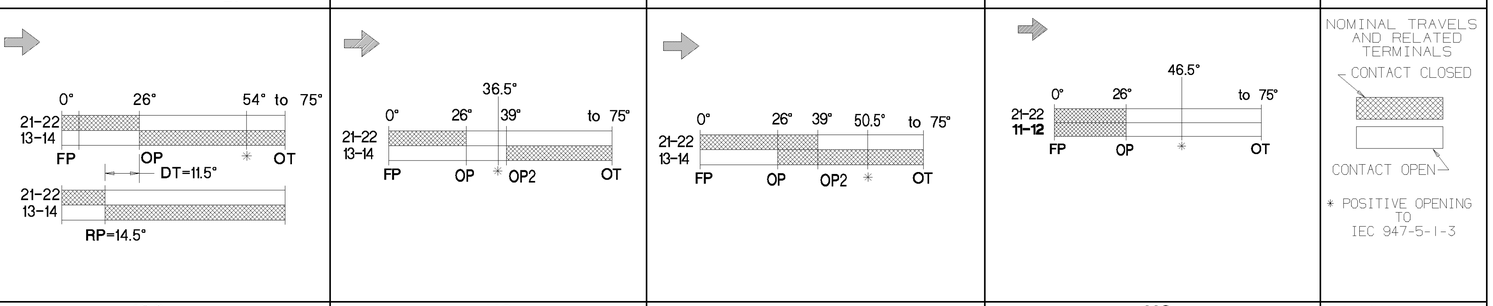

120 (1.1)	110 (1.0)	110 (1.0)	110 (1.0)	NORMAL OPERATING TORQUE MAX	Nmm (in.lbs)
140 (1.3)	160 (1.5)	170 (1.6)	150 (1.4)	MAXIMUM DISCONNECT TORQUE	Nmm (in.lbs)

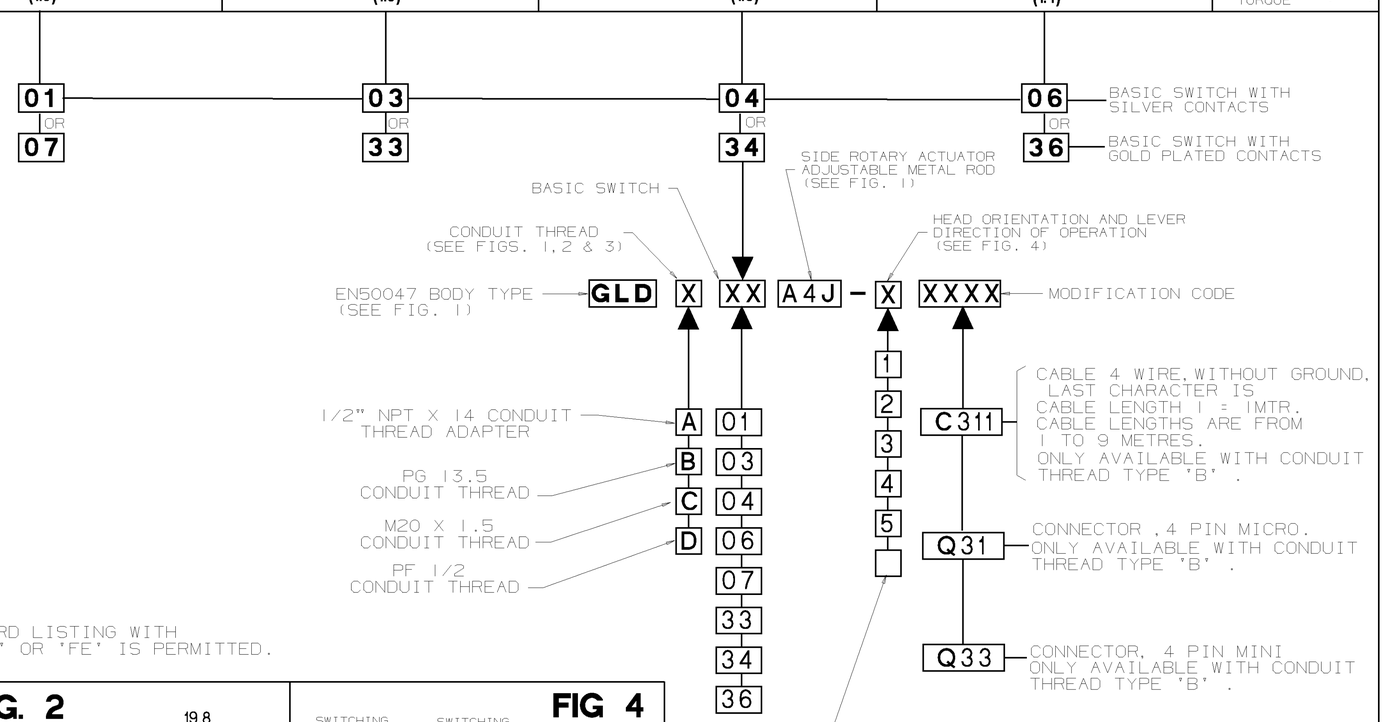

NOTES:-

1. MICRO SWITCH BLUE GLASS FILLED POLYESTER HOUSING & COVER. BLACK GLASS FILLED POLYAMIDE HEAD.
2. ENCLOSURE DOUBLE INSULATED TO IEC 539 CLASS II.
3. MINIMUM OPERATING VELOCITY (Vmin) = 0.26 rad/s
   MAXIMUM OPERATING VELOCITY (Vmax) = 25 rad/s
   MAXIMUM OPERATING FREQUENCY (Fmax) = 250 OPS/MIN
4. FREE POSITION (FP), OPERATING POINT (OP), OVERTRAVEL (OT) AND PRETRAVEL (PT) ALL TO EN50047.

5 MAXIMUM TIGHTENING TORQUE FOR FIXING SCREW = 0.5Nm (4.4in.LB)

6 MAXIMUM TIGHTENING TORQUE FOR FIXING SCREW = 0.8Nm (7in.LB)

NO CHANGES CAN BE MADE TO THIS DRAWING WITHOUT JOINT NEWHOUSE/FREEPORT APPROVAL

NOTE:-
ANY STANDARD LISTING WITH SUFFIX 'RS' OR 'FE' IS PERMITTED.

FIG. 2

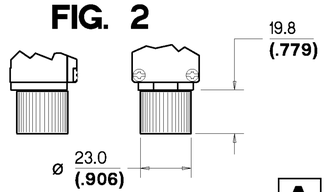

1/2" NPT X 14 CONDUIT THREAD ADAPTER **A**

FIG. 3

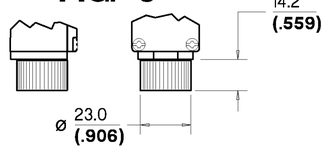

M20 X 1.5 & PF1/2 CONDUIT THREAD ADAPTERS **C** **D**

FIG 4

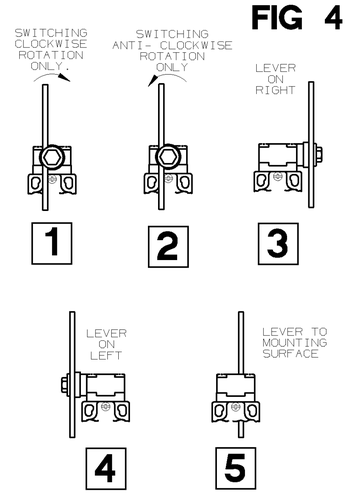

NOTE:
FOR CONNECTION DIAGRAMS AND ADDITIONAL ELECTRICAL, ENVIRONMENTAL & DIMENSIONAL INFORMATION SEE DRAWING GL-49212.

IEC 947-5-1 ELECTRICAL RATING

SILVER CONTACTS						GOLD PLATED CONTACTS
AC		AC (FOR 2NC)		DC		
A600 Ue	AC15 Ie	A500 Ue	AC15 Ie	Q300 Ue	DC13 Ie	
VOLTS	AMPS	VOLTS	AMPS	VOLTS	AMPS	I_{th} = 10A
120	6	120	6	125	0.55	1V 10µA MIN.
240	3	240	3	250	0.27	50V 100mA MAX.
380	1.9	380	1.9			
480	1.5	480	1.5			
500	1.4	500	1.4			
600	1.2					

ENVIRONMENTAL	APPROVALS
IP66 NEMA 1,4,12,13	UL
TEMP RANGE : -25°C TO 85°C / -13°F TO 185°F	CSA
STORAGE : -40°C TO 85°C / -40°F TO 185°F	IEC 947-5-1
SHOCK : 50G PER IEC 68-2-27	EN50047
VIBRATION : 10G PER IEC 68-2-6	

DRAWN	M. LOCH	4/95
CHECK	I. WEIR	4/95
DESIGN	J. BOYD	4/95
AUTHOR'N	P. TRICKETT	4/95

THE COPYRIGHT OF THIS DRAWING IS THE PROPERTY OF HONEYWELL LTD. THE DRAWING IS SUPPLIED IN CONFIDENCE AND MUST NOT BE USED FOR ANY PURPOSE OTHER THAN THAT FOR WHICH IT IS SUPPLIED.

THIRD ANGLE PROJECTION | SCALE 1:1 | DIMENSIONS ARE IN MM/INCHES. | MODIFY ON CAD SYSTEM ONLY