PART NUMBER	ITEM ① BODY	ITEM ② CONTACT	ITEM ③ INSULATOR	ITEM ④ COUPLING NUT	ITEM ⑤ COUPLING NUT SPRING
134-1018-001	BRASS GOLD PL .00001 MIN OVER NICKEL PL .00005 MIN OVER COPPER PL .00005 MIN	BERYLLIUM COPPER GOLD PL .00005 MIN OVER NICKEL PL .00005 MIN OVER COPPER PL .00005 MIN	TEFLON	BRASS GOLD PL .00001 MIN OVER NICKEL PL .00005 MIN OVER COPPER PL .00005 MIN	BERYLLIUM COPPER UNPLATED

DRAWING NO.					
C - 134-1018-001/010					
0	REVISIONS				
ENGINEERING RELEASE					
1	9-11-98	R H	I R		ECN 45831

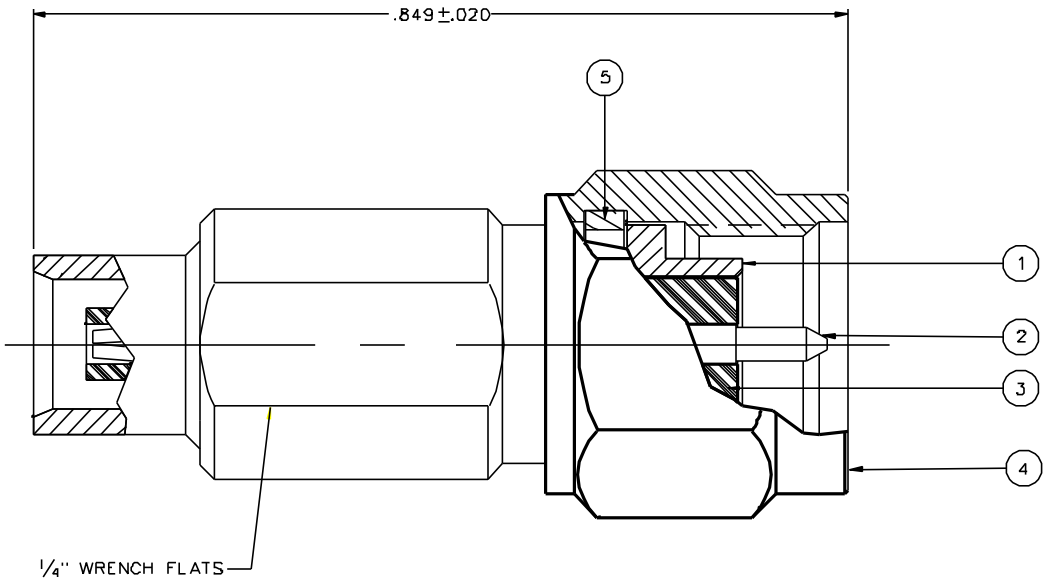

NOTES:

1. SPECIFICATIONS:

IMPEDANCE: 50 OHMS
FREQUENCY RANGE: 0-6 GHz
VSWR: 1.03+.03F MAX (F IN GHz)
WORKING VOLTAGE: 335 VRMS MAX AT SEA LEVEL
DIELECTRIC WITHSTANDING VOLTAGE: 1000 VRMS MIN AT SEA LEVEL
INSULATION RESISTANCE: 10000 MEGOHM MIN
CONTACT RESISTANCE:
CENTER CONTACT - INITIAL 5 MILLIOHM MAX, AFTER ENVIRONMENTAL 8 MILLIOHM MAX
OUTER CONDUCTOR - GOLD PLATED INITIAL 1 MILLIOHM MAX, AFTER ENVIRONMENTAL 1.5 MILLIOHM MAX

BRAID TO BODY - NOT APPLICABLE
CORONA LEVEL: 250 VOLTS MINIMUM AT 70,000 FEET
INSERTION LOSS: .1 dB MAX AT 1 GHz
RF LEAKAGE: -50 dB AT 2.5 GHz
RF HIGH POTENTIAL WITHSTANDING VOLTAGE: 700 VRMS AT 4 AND 7 MHZ

MECHANICAL:

ENGAGE/DISENGAGE FORCE (MCX): 3.4 LBS MAX ENGAGEMENT
5 LBS TYPICAL DISENGAGEMENT
ENGAGE/DISENGAGE TORQUE (SMA): 2 IN LBS MAX
MATING TORQUE (SMA): 7-10 IN LBS MAX
CONTACT RETENTION FORCE: 6 LBS MIN
CONTACT RETENTION TORQUE: NOT APPLICABLE
COUPLING NUT RETENTION (SMA): 60 LBS MIN
CABLE ACCEPTABILITY: NOT APPLICABLE
CABLE HEX CRIMP SIZE: NOT APPLICABLE
CABLE RETENTION: NOT APPLICABLE
DURABILITY: 500 CYCLES MIN

ENVIRONMENTAL:

(MEETS OR EXCEEDS THE APPLICABLE PARAGRAPH OF MIL-C-39012)
THERMAL SHOCK: MIL-STD-202, METHOD 107, CONDITION F
OPERATING TEMPERATURE: -55 DEG C TO 165 DEG C
CORROSION: MIL-STD-202, METHOD 101, CONDITION B
SHOCK: MIL-STD-202, METHOD 213, CONDITION B
VIBRATION: MIL-STD-202, METHOD 204, CONDITION B
MOISTURE: MIL-STD-202, METHOD 106

CUSTOMER DRAWING

THIS DRAWING TO BE INTERPRETED PER ANSI Y 14.5M - 1982

"μSTATION"

COMPANY CONFIDENTIAL

TOLERANCE UNLESS OTHERWISE SPECIFIED	DRAWN BY T.A.KARI	DATE 7-24-98	Johnson Components 299 Johnson Ave. P.O. Box 1732 Waseca, MN 56093-0832
DECIMALS .XX ____ mm ____ .XXX REF ____	CHECKED BY	DATE	TITLE ASSEMBLY, ADAPTER BETWEEN SERIES SMA PLUG TO MCX JACK
MATL ____	APPROVED BY TAK	DATE 9-16-98	
FINISH ____	APPROVED BY RJB	DATE 9-24-98	CODE NO. / DRAWING NO. C - 134-1018-001/010
	RELEASE DATE		SCALE 10:1 / U/M INCH / SHEET 2 OF 2