THIS DRAWING IS UNPUBLISHED. RELEASED FOR PUBLICATION - , - .
© COPYRIGHT - By - ALL RIGHTS RESERVED.

LOC	DIST
—	—

REVISIONS

P	LTR	DESCRIPTION	DATE	DWN	APVD
	U	REV PER ECO 13-012380	8-1-13	CT	CD

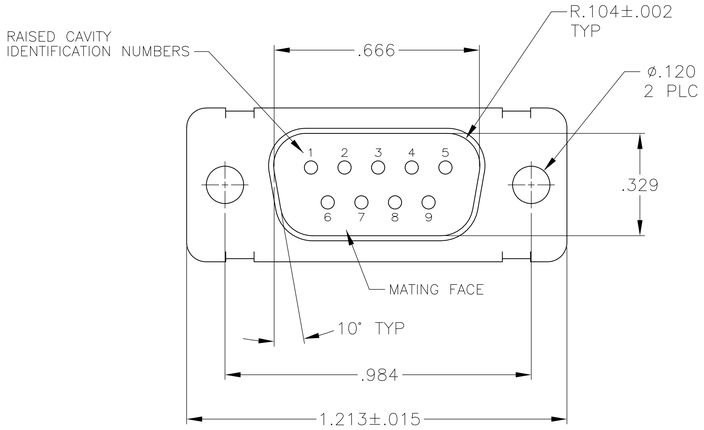

1. THIS PLUG IS DESIGNED TO CONFORM TO THE LATEST ISSUE OF MIL-C-24308.
2. MAX WIRE INSULATION TO BE USED WITH THIS PLUG IS .072 DIA.
3. METAL RETENTION CLIPS ARE INCLUDED IN INSERTS.
4. THIS PLUG WILL ACCEPT SIZE 20 CRIMP TYPE PIN CONTACT M 39029/64-369 (TE CONNECTIVITY P/N 205089-1) FOR ALTERNATE CONTACT OPTIONS CONSULT TE CONNECTIVITY CATALOG.

5. PART NO. 205162-4, 205162-5 & 5-205162-4 HAS GROUNDING INDENTS ON FRONT SHELL. (NOT SHOWN)

6. FINISH: CADMIUM PER QQ-P-416, TYPE II, CLASS 2 OVER COPPER PER AMS2418, CLASS 4.

8. THIS NOTE APPLIES TO 205162-1 ONLY.
M24308/4-1F MARKED ON FAR SIDE.
205556-2 MARKED ON NEAR SIDE.
MFG'S PART NO. & MILITARY PART NO. MARKED ON CONNECTOR REPRESENTS KIT NUMBER WITH CONTACTS
PACKAGE STAMPED M 24308/4-259F

9. CONTACTS ARE NOT INCLUDED IN THIS ASSEMBLY. MUST BE ORDERED SEPARATELY.

10. FINISH: BRIGHT TIN .000400-.000550 THK PER ASTM-B-545 OVER COPPER .000050 MIN THK PER AMS2418.

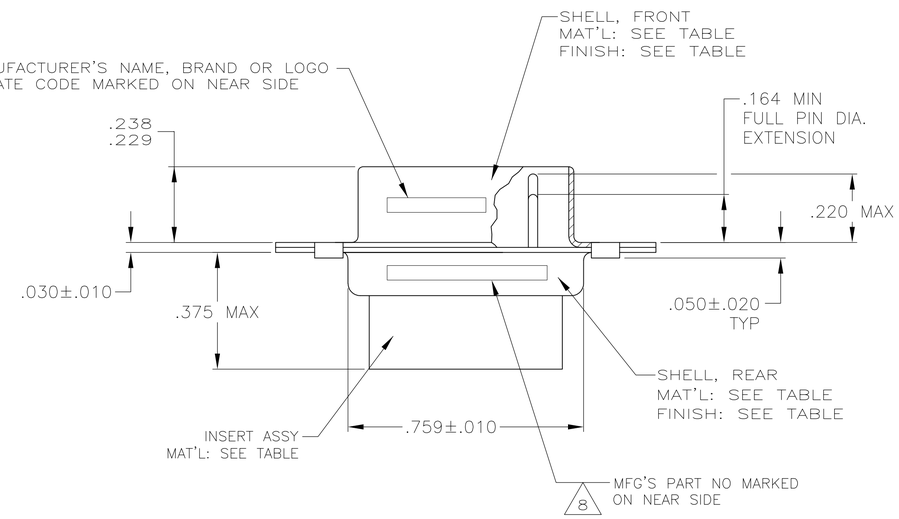

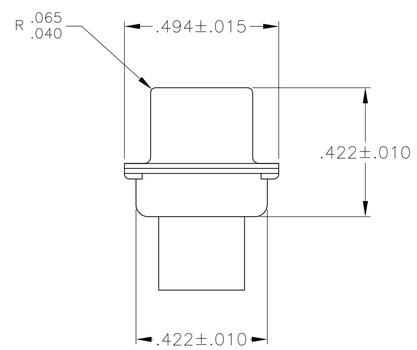

REMARKS	SHELL FINISH	SHELL MATERIAL	INSERT MAT'L	PART NUMBER
5 11	10	STEEL PER ASTM-A-109 OR EQIVALENT	POLYESTER PER MIL-M-24519, TYPE GET-30F	5-205162-4
9	10	STEEL PER ASTM-A-109 OR EQIVALENT	POLYESTER PER MIL-M-24519, TYPE GET-30F	205162-6
5 9	10	STEEL PER ASTM-A-109 OR EQIVALENT	POLYESTER PER MIL-M-24519, TYPE GET-30F	205162-5
5 9	10	STEEL PER ASTM-A-109 OR EQIVALENT	POLYESTER PER MIL-M-24519, TYPE GET-30F	205162-4
SUPSD BY 206288-1 9	6	STEEL PER ASTM-A-109 OR EQIVALENT	POLYESTER PER MIL-M-24519, TYPE GET-30F	205162-3
SUPSD BY 207252-2	6	STEEL PER ASTM-A-109 OR EQIVALENT	POLYESTER PER MIL-M-24519, TYPE GET-30F	205162-2
1 8 9	6	STEEL PER ASTM-A-109 OR EQIVALENT	POLYESTER PER MIL-M-24519, TYPE GET-30F	205162-1

THIS DRAWING IS A CONTROLLED DOCUMENT.

DIMENSIONS: INCHES

TOLERANCES UNLESS OTHERWISE SPECIFIED:
0 PLC ± –
1 PLC ± –
2 PLC ± –
3 PLC ± .005
4 PLC ± –
ANGLES ± 0°30'

MATERIAL: SEE CALLOUTS
FINISH: SEE CALLOUTS

DWN C.C.THOMAS 2-9-05
CHK D.MILLER 2-9-05
APVD D.MILLER 2-9-05
PRODUCT SPEC MIL-C-24308
APPLICATION SPEC I.S. 7516 & 7505
WEIGHT –

TE Connectivity

NAME PLUG ASSY,AMPLIMITE,9 POSN SIZE 1,SERIES 109 –

SIZE A1 | CAGE CODE 00779 | DRAWING NO C-205162 | RESTRICTED TO –

CUSTOMER DRAWING | SCALE 4:1 | SHEET 1 OF 1 | REV U

4805 (3/11)