SHEET OF

TOP VIEW -SHOW ORIENTATION OF LEGENDS IN RESPECT TO THE PCB PIN TERMINALS.

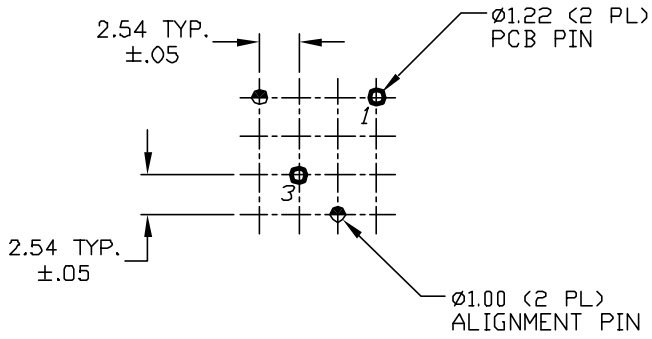

RECOMMENDED P.C.B. LAYOUT

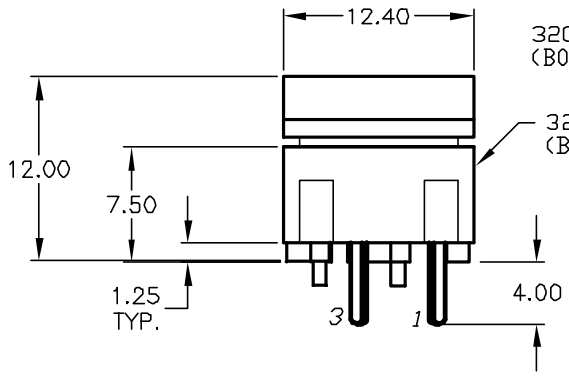

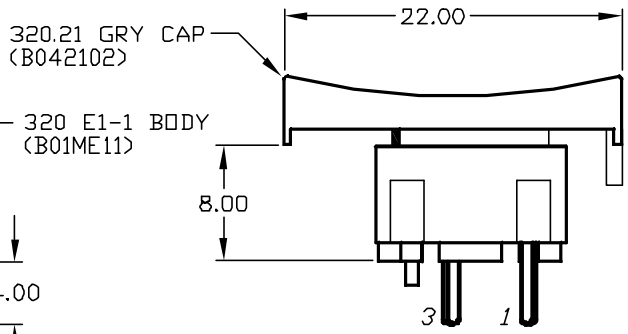

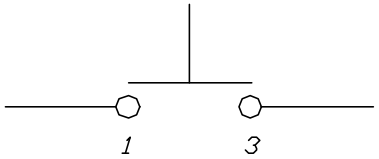

CIRCUIT: SPST

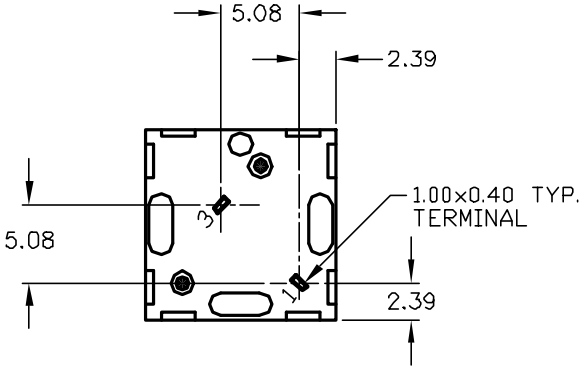

NOTES:
1. ALL DIMINSIONS IN MM
2. GENERAL TOLERANCE: X.X=±0.4
   X.XX=±0.25
3. TERMINAL NO'S FOR REFERENCE ONLY.
4. RATING: 25mA, @50VDC
5. OPERATING FORCE: 120gF
6. TRAVEL TO MAKE: 0.7mm
7. USES CONTACT DOME: (B050001)
   320 E1-1 CONTACT

REV.	ECN No.	DESCRIPTION	DATE	CHKD
A	12168	RELEASED FOR PRODUCTION	5/22/02	CJB

THE INFORMATION CONTAINED IN THIS DOCUMENT IS PROPRIETARY TO E-SWITCH AND IS NOT TO BE COPIED OR TRANSFERRED

E-SWITCH®

TITLE				
320.21 E1-1 GRY				
SCALE 2:1	DATE 5/22/02	DR CB	DWG XB0876A	REV A