DWG. NO.
JBXFD2G03MSSDSMRC

THIS DRAWING IS A CONTROLLED DOCUMENT FOR SOURIAU USA, INC.
IT IS SUBJECT TO CHANGE WITHOUT NOTIFICATION.
CONTACT THE ENGINEERING DIVISION, CUSTOMER SERVICE FOR THE LATEST REVISION.

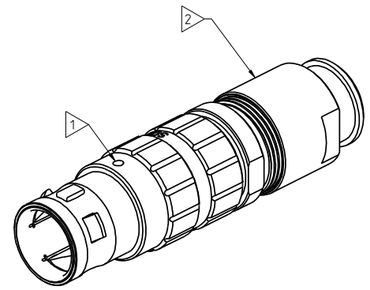

SCALE 2:1

NOTES:

1. RED DOT.

MATERIAL:

OUTER SHELL & COLLET NUT : LATCHING SLEEVE : HALF BUSHES :	BRASS CuZn40Pb3 (C38500/C36000)
PIN CONTACT (SOLDER) :	BRASS CuZn35Pb2 (C35300/C36000)
CLIP :	BERYLLIUM COPPER CuBe1.9 (C17200/C36000)
INSULATOR :	PEEK WITH 15% GLASS FILLED. COLOR BROWN
COLLET :	PA6/6 WITH MoS2. COLOR BLACK

FINISH:

OUTER SHELL & COLLET NUT :	CHROME OVER NICKEL UNDERCOAT
OTHER BRASS PARTS EXCEPT PIN CONTACTS :	NICKEL
PIN CONTACTS :	GOLD AS PER MIL-G-45204C TYPE 1.CLASS 00.

2. CONNECTOR WITH BACKNUT FOR PROTECTIVE BOOT - PROTECTIVE BOOT TO ORDER SEPARATELY.

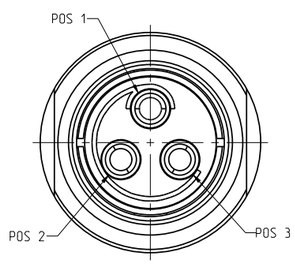

WIRE SIDE VIEW
('COLLET SET' NOT SHOWN)

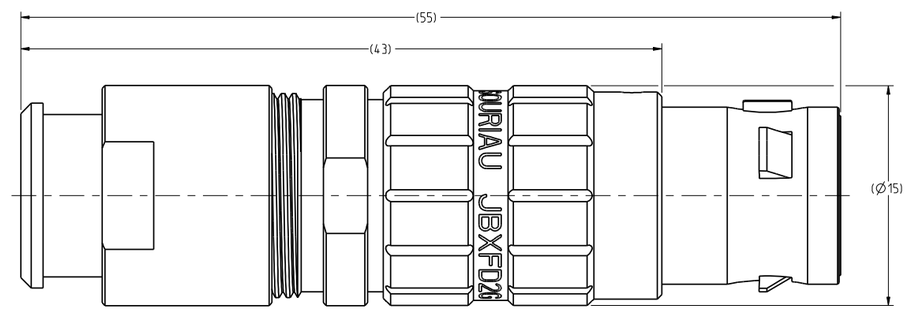

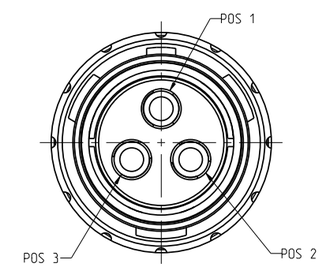

MATING SIDE VIEW

REV	DESCRIPTION	BY DATE	CHKD DATE
A	RELEASED PER ECN 11336	SSF 01-18-11	SDH 01-18-11

DRAWING TITLE
JBX, SIZE 2, 3 POSITION, MALE STRAIGHT PLUG

CAT NO. **JBXFD2G03MSSDSMR**

CAGE NO: 09922 | SIZE: C

APPROVAL		
DRAWN:	SNL	12-20-10
CHKD :	TW	12-20-10
DSGN :	XXX	mm-dd-yy
MFG :	DH	12-20-10
QC :	DK	12-20-10

DRAWING SCALE: 4:1

DRAWING NO.	REV
JBXFD2G03MSSDSMRC	A

1 OF 2

LINEAR MEASURE: (INCH) mm (INCH)
THIRD ANGLE PROJECTION

TOLERANCES UNLESS OTHERWISE SPECIFIED

No. OF PLACES	mm [INCH]
WHOLE No.	±0.5 [±.02]
ONE PLACE	±0.2 [±.008]
TWO PLACES	±0.1 [±.004]
ANGLES	±1°

CUSTOMER

INTERPRET THIS DRAWING IN ACCORDANCE WITH ASME Y14.5M - 1994.

SOURIAU Connection Technology
www.souriau.com

THE INFORMATION CONTAINED IN THIS DRAWING IS CONFIDENTIAL AND MAY NOT BE DISCLOSED WITHOUT WRITTEN CONSENT FROM SOURIAU USA, INC.

PRO-E

THIS DRAWING IS A CONTROLLED DOCUMENT FOR SOURIAU USA, INC.
IT IS SUBJECT TO CHANGE WITHOUT NOTIFICATION
CONTACT THE DESIGNER FOR WORKING COPIES OF THE LATEST REVISION.

DWG. NO.
JBXFD2G03MSSDSMRC

ELECTRICAL:

EMI SHIELDING :	SHIELDED FOR THE RANGE 55dB UP TO 100MHz
INSULATION RESISTANCE :	>500MΩ PER ANSI-EIA-364-D METHOD 21
MAX. CURRENT RATING :	(SEE TABLE 1) MAXIMUM CURRENT THAT CAN BE APPLIED SIMULTANEOUSLY ON EACH LINE OF THE CONNECTOR MATED PAIR, CONTINUOUSLY DURING ITS LIFE TIME IN NORMAL CLIMATIC CONDITIONS.
CONNECTOR TESTING : VOLTAGE	1700Vrms TEST VOLTAGE IS APPROXIMATELY 75% OF THE DWV VOLTAGE AT NORMAL CLIMATIC CONDITIONS. THIS VOLTAGE CAN BE ACHIEVED SEVERAL TIMES, BUT NOT APPLIED CONTINUOUSLY.
CONNECTOR WORKING : VOLTAGE	830/560 (Vdc/ Vrms) WORKING VOLTAGE IS APPROXIMATELY 1/3 OF THE TEST VOLTAGE. THIS VOLTAGE IS SUSTAINABLE FOR THE LIFE OF THE CONNECTOR IN ITS WORKING ENVIRONMENT.

PHYSICAL:

MAXIMUM WIRE SIZE USED :	18 AWG
CABLE DIAMETER WITH PLASTIC : COLLET SET SUPPLIED	Ø3.5 mm MIN. TO Ø9.7 mm MAX.

ENVIRONMENTAL:

ENDURANCE:	1000 CYCLES AS PER MIL-STD 1344A, METHOD 2016.1
SHOCK:	100 g , DURATION 6 ms; AS PER MIL-STD 1344A, METHOD 2004.1
VIBRATIONS:	10 TO 2000Hz γ = 20g, AS PER MIL-STD 1344A, METHOD 2005.1
PROTECTION INDEX:	IP 40 AS PER CEI 529
OPERATING TEMPERATURE: WITH PLASTIC COLLETS:	-55°C TO +125°C (-67°F TO +257°F)
WITH OPTIONAL METALLIC COLLETS: (ONLY ON REQUEST)	-55°C TO +200°C (-67°F TO +392°F)

PIN CONTACT

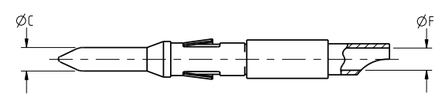

TABLE 1

CONTACT		USABLE CABLES			MAX. CURRENT RATING (A)	CONTACT RESISTANCE (mΩ)
ØC	ØF	CORE SECTION (mm^2) MIN.	CORE SECTION (mm^2) MAX.	AWG		
1.6	1.5	-	0.93	18	17	2.5

LINEAR MEASURE:	mm (INCH)
THIRD ANGLE PROJECTION	
TOLERANCES UNLESS OTHERWISE SPECIFIED	
No. OF PLACES	mm [INCH]
WHOLE No.	±0.5 [±.02]
ONE PLACE	±0.2 [±.008]
TWO PLACES	±0.1 [±.004]
ANGLES	±1°

DRAWING TITLE
JBX, SIZE 2, 3 POSITION, MALE STRAIGHT PLUG

CAT NO. **JBXFD2G03MSSDSMR**

CAGE NO: 09922 | SIZE: C

CUSTOMER

INTERPRET THIS DRAWING IN ACCORDANCE WITH ASME Y14.5M - 1994.

SOURIAU Connection Technology
www.souriau.com

APPROVAL		
DRAWN:	SNL	12-20-10
CHKD :	TW	12-20-10
DSGN :	XXX	mm-dd-yy
MFG :	DH	12-20-10
QC :	DK	12-20-10
DRAWING SCALE: 4:1		
DRAWING NO.		REV
JBXFD2G03MSSDSMRC		A
2 OF 2		

THE INFORMATION CONTAINED IN THIS DRAWING IS CONFIDENTIAL AND MAY NOT BE DISCLOSED WITHOUT WRITTEN CONSENT FROM SOURIAU USA, INC.

PRO-E