DRAWING FOR REFERENCE: This is subject to change without notice
08/11/2012

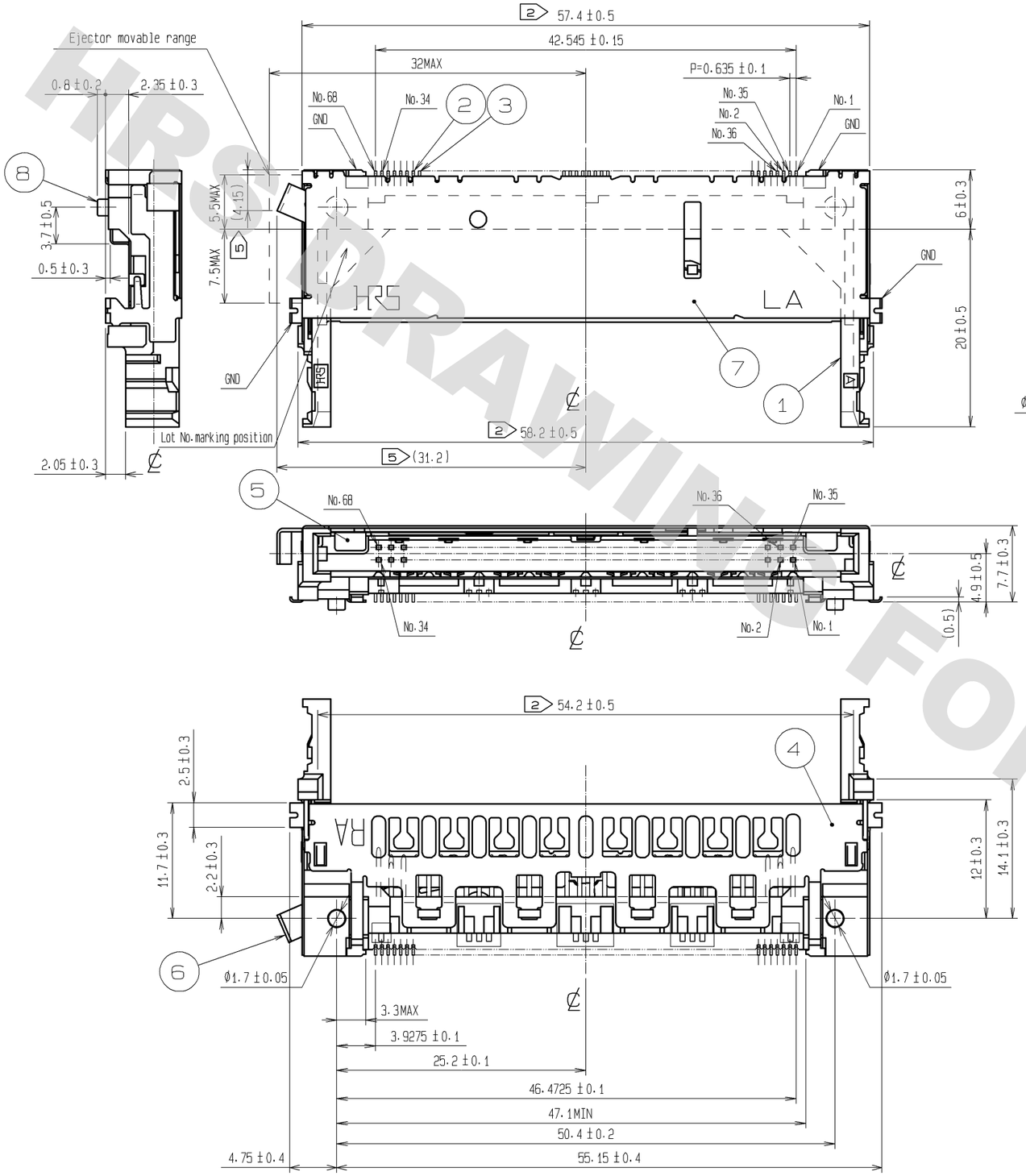

RECOMMENDED LAND PATTERN

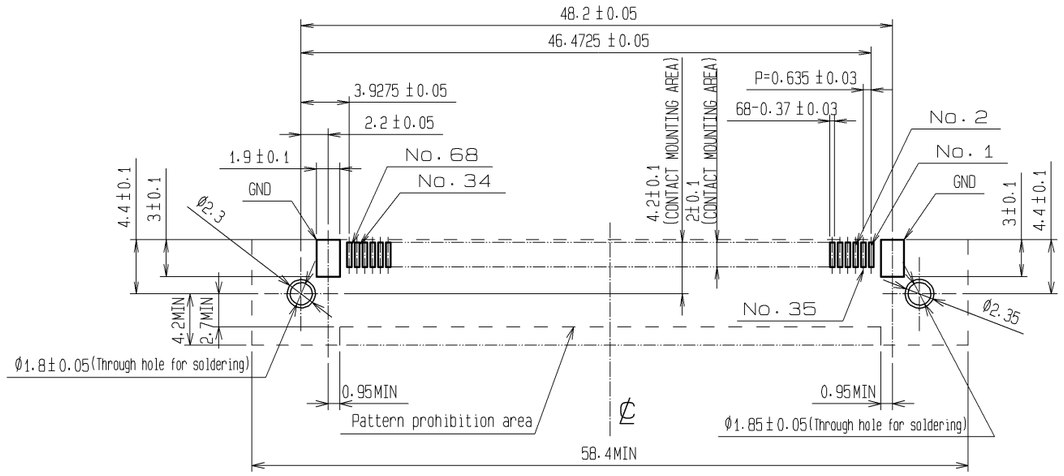

LAND PATTERN DIMENSION OF PWB (ON MOUNTED SIDE)

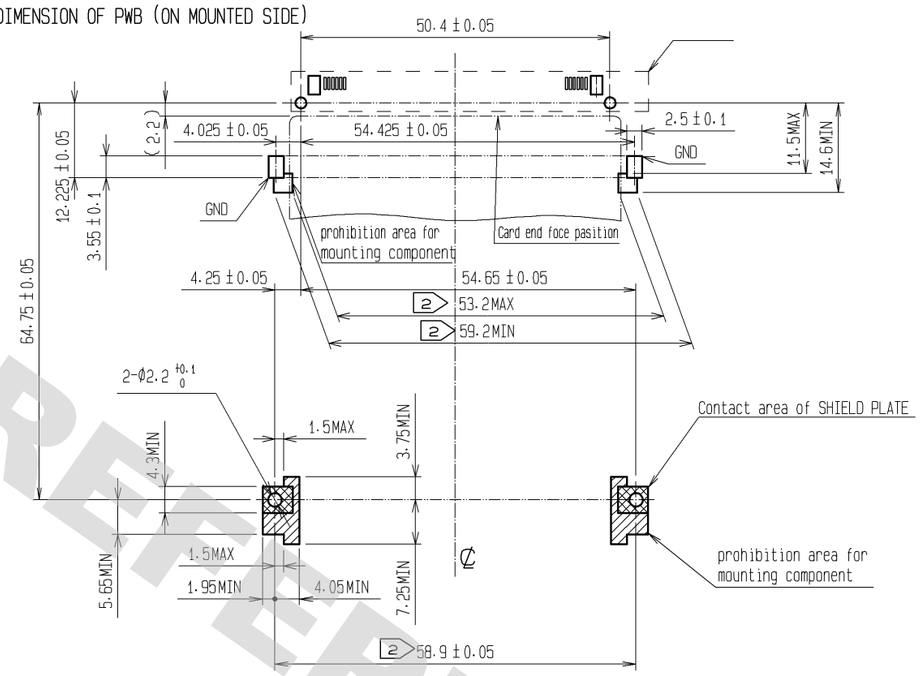

NO.	MATERIAL	FINISH , REMARKS	NO.	MATERIAL	FINISH , REMARKS
2, 3	BRASS	CONTACT AREA : Ni1.5μm+Au0.1μm DIP AREA : Ni1.5μm+Sn1μm	8	COPPER ALLOY	Ni1.5μm+Sn1μm
			5, 6	STAINLESS STEEL	
1	PA		4, 7	STAINLESS STEEL	Ni

UNITS	SCALE	COUNT	DESCRIPTION OF REVISIONS	DESIGNED	CHECKED	DATE
mm	2 : 1					

HRS HIROSE ELECTRIC CO., LTD.

APPROVED	: SI. TOMIOKA	08. 06. 10	DRAWING NO.	EDC3-153286-01
CHECED	: SI. TOMIOKA	08. 06. 10	PART NO.	IC14A-PLR-SF-EJL(71)
DESIGNED	: NH. SUGITA	08. 06. 10	CODE NO.	CL640-1308-0-71
DRAWN	: NN. ONDA	08. 06. 04		1/1

Notes
1 PC card interface dimension corresponds to 「PC Card Standard」.
2 These dimensions are symmetrical for the center line.
3 This product is available in combination with CARD-GUIDE UNIT, 「IC14A-G-*EJL*」.
4 CARD-GUIDE UNIT, 「IC14A-G-*EJL*」to be assembled after mounting this product.
5 The dimensions indicate the ejector component position. Assemble after checking the component is in the right position as shown.

HRS DRAWING FOR REFERENCE