MICRO SWITCH
A DIVISION OF MINNEAPOLIS-HONEYWELL REGULATOR COMPANY
FREEPORT, ILLINOIS
FED. MFR. CODE 91929

SWITCH—ENCLOSED

CATALOG LISTING
BZLN-2-RH5

S

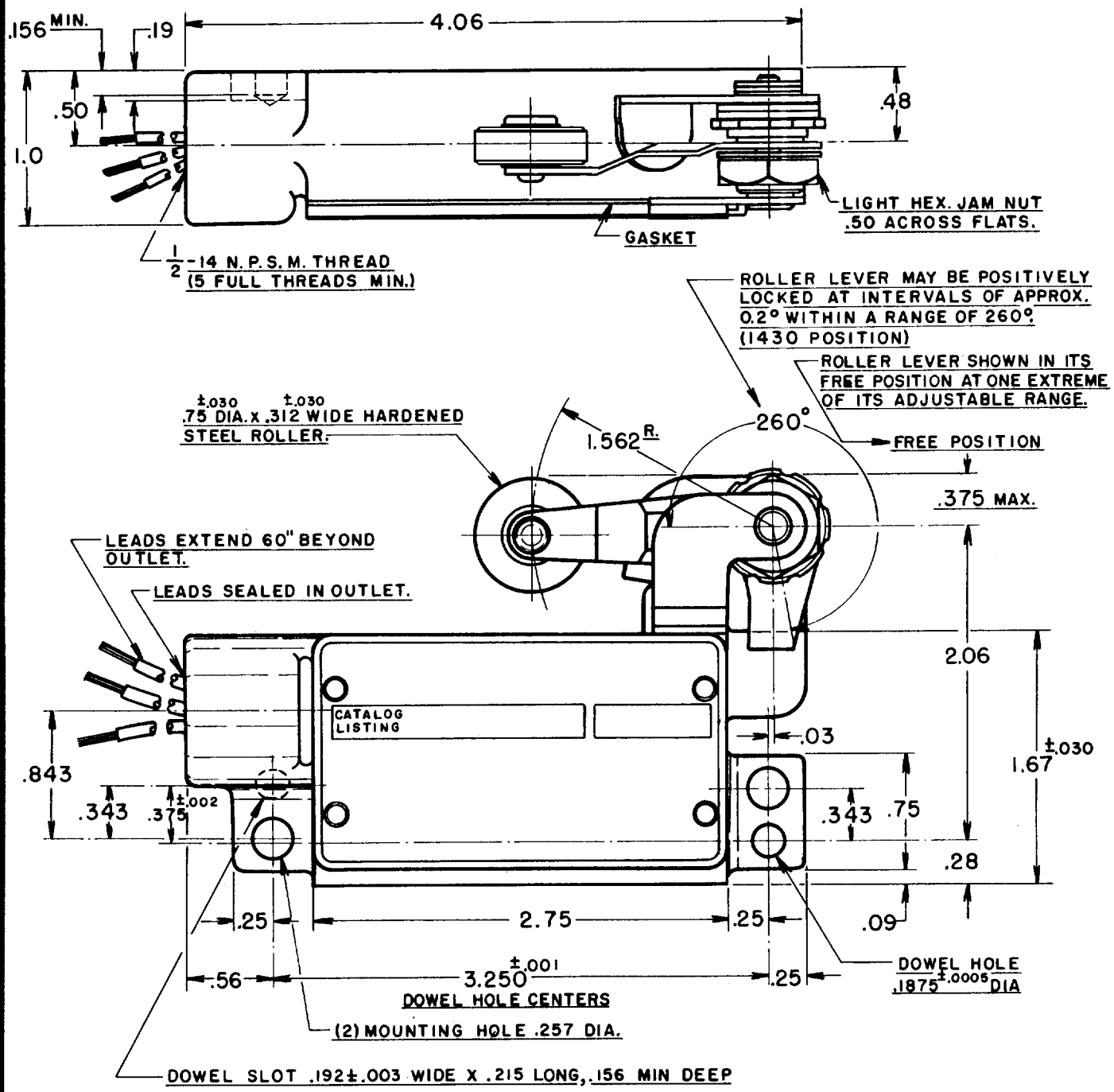

WIRING CONNECTIONS
COMMON—BLACK LEAD
NORMALLY CLOSED—RED LEAD
NORMALLY OPEN—BLUE LEAD

THIS DRAWING COVERS A PROPRIETARY ITEM AND IS THE PROPERTY OF MICRO SWITCH, A DIVISION OF HONEYWELL. THIS DRAWING IS NOT TO BE COPIED OR USED WITHOUT THE APPROVAL OF MICRO SWITCH.

CHARACTERISTICS

OPERATING FORCE — — — 3 LBS. MAX.
RELEASE FORCE — — — — 1/4 LB. MIN.
PRETRAVEL — — — — — (3°)-.078 MAX.
DIFFERENTIAL TRAVEL — (1/2°)-.014 MAX.
OVERTRAVEL — — — — — (17°)-.469 MIN.

ELECTRICAL DATA

CONTACT ARRANGEMENT
S.P.D.T.

-L96- 15 A-125, 250, OR 480 VAC
1/2 A-125 VDC; 1/4 A-250 VDC
1/8 HP-125 VAC, 1/4 HP-250 VAC

SCALE — FULL
DO NOT SCALE PRINT

UNLESS OTHERWISE SPECIFIED
DIMENSIONS ARE IN INCHES
TOLERANCES ARE:

ONE PLACE	(.0)	±.030
TWO PLACE	(.00)	±.015
THREE PLACE	(.000)	±.005
ANGLES		±

WEIGHT .850 LB. PLUS LEADS

BZLN-2-RH5	REPLACES		
M	RELEASE NO.	S.R. 5744	
DRAWING NUMBER			
8		4 Oct 56	
ISSUE			
	CHECK	M.J.L.	
		4 Oct 56	
		ACG	
	CHECK		
		P Oct 56	
		LAD	
	CHECK		
		56	
		3 OCT.	
		K. A. F.	

REVISIONS

A	C018546	MBF 14 NOV 63
B	C017653	JAN 31 AUG 64
C	C011950	DAW 27 OCT 64
D	C021551	WEG 9 JUNE 66
E	C050714	GJW 28 APR 82
F	C055988	MAM 31 OCT 84
G	C081513B	JAK 12 MAR 97

FORMTEK
DRAWN