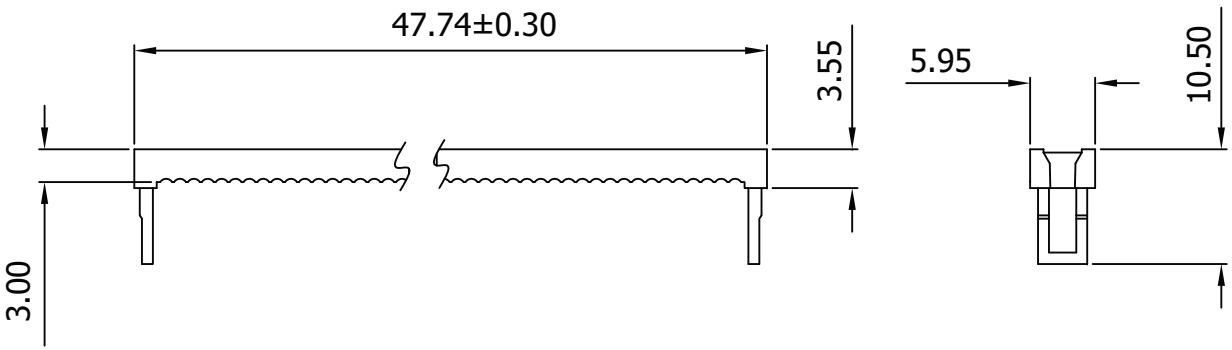

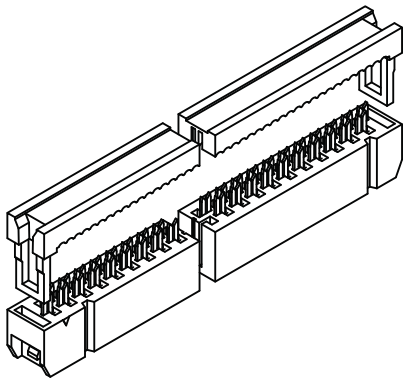

DIMENSION

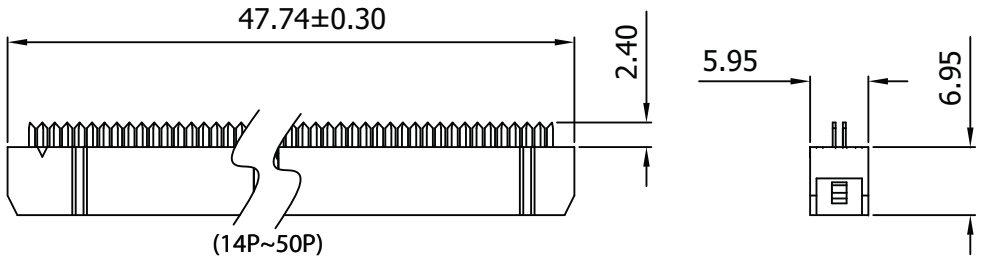

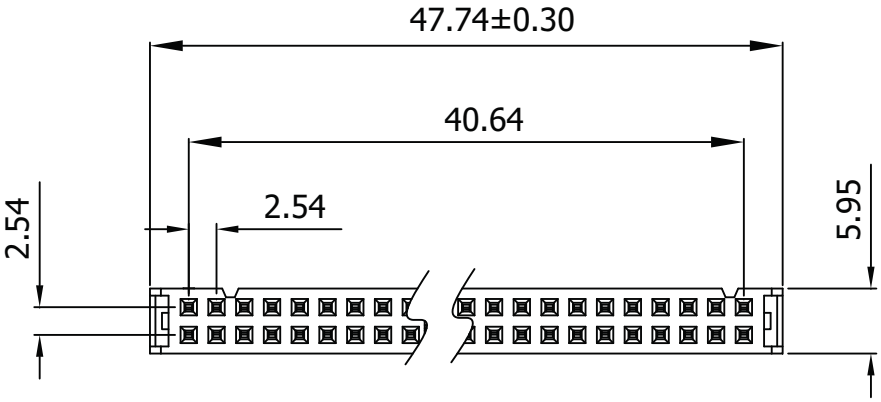

Material:

- Insulator: P.B.T. 30% Glass Fiber, UL 94V-0
- Contact Material: Phosphor Bronze, Gold flash over Nickel

Electrical:

- Current Rating: 1Amp DC
- Insulation Resistance: 3,000MΩ Min.
- Contact Resistance: 30MΩ Max.
- Dielectric Withstanding: 500V AC
- Operating Temperature: -40°C ~ +105°C
- Terminated with 1.27MM pitch flat ribbon cable.

Unit: MM±0.20MM

RoHS Complaint

Scale	1:1
TOLERANCE	
X.X	±0.40
X.XX	±0.25
X.XXX	±0.15
Angle	±3°

Modification	Date	Name

		Name
Drawn	10.19.11	Chappell
Approved		

ASSMANN WSW components

Item No. **AWP34-8240-T-R**

Title: IDC-Socket - 2.54MM Pitch, Gold Flash, w/o Central Lug, w/o Strain Relief, 34 Contacts

Drawing No.

rev00

Replace

Sheet