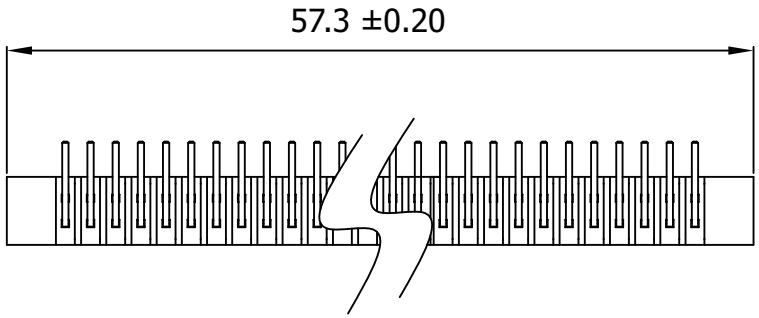

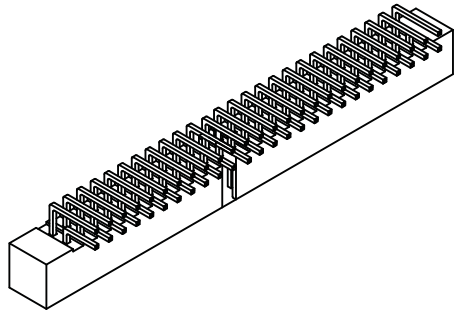

Material:

- Insulator: Polyester, UL 94V-0
- Contact Material: Copper Alloy
- Finish: Gold Plated
- Standard: Gold flash, PA6T

Electrical:

- Current Rating: 1Amp
- Insulation Resistance: 5,000MΩ Min.
- Dielectric Withstanding: 500V AC
- Operating Temperature: -40°C ~ +105°C

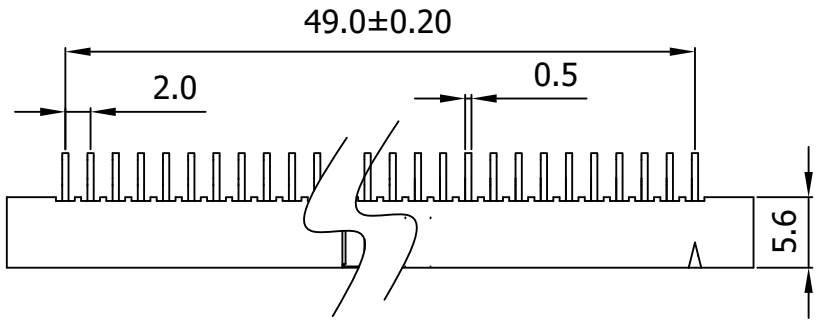

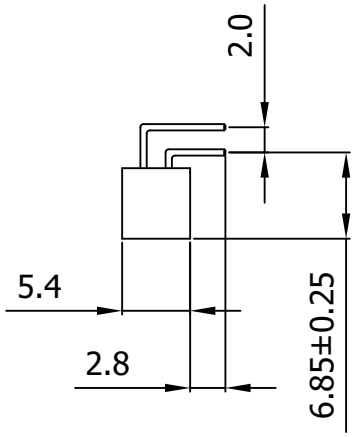

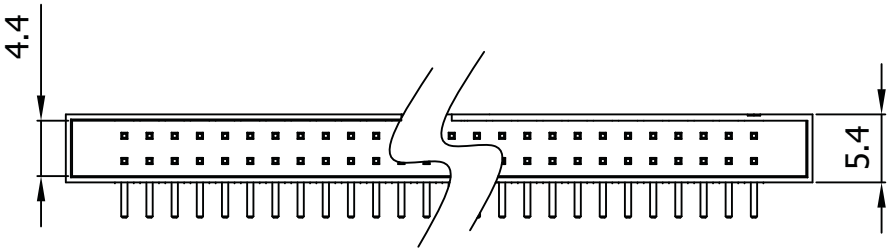

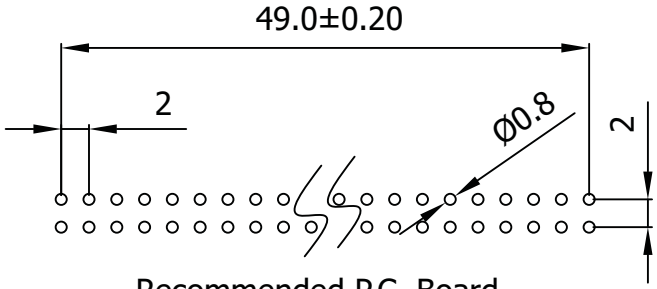

Recommended P.C. Board
Tolerances: ±0.05mm
Hole Layout

Unit: MM±0.30MM

Ⓐ = Assmann logo

RoHS Compliant

ITEM NO.

AWHW2-50A-0202-T-R

TITLE

IDC Box Header Right Angle - 2.00MM Pitch, Gold flash, 50 Contacts

ASSMANN Electronics, Inc.
1840 W. Drake Drive, Suite 101 • Tempe, AZ 85283
Toll Free: 1-877-277-6266 • Email: info@usa-assmann.com

THIS DRAWING IS UNPUBLISHED
©Copyright 2010 by Assmann Electronic Components
All International Rights Reserved