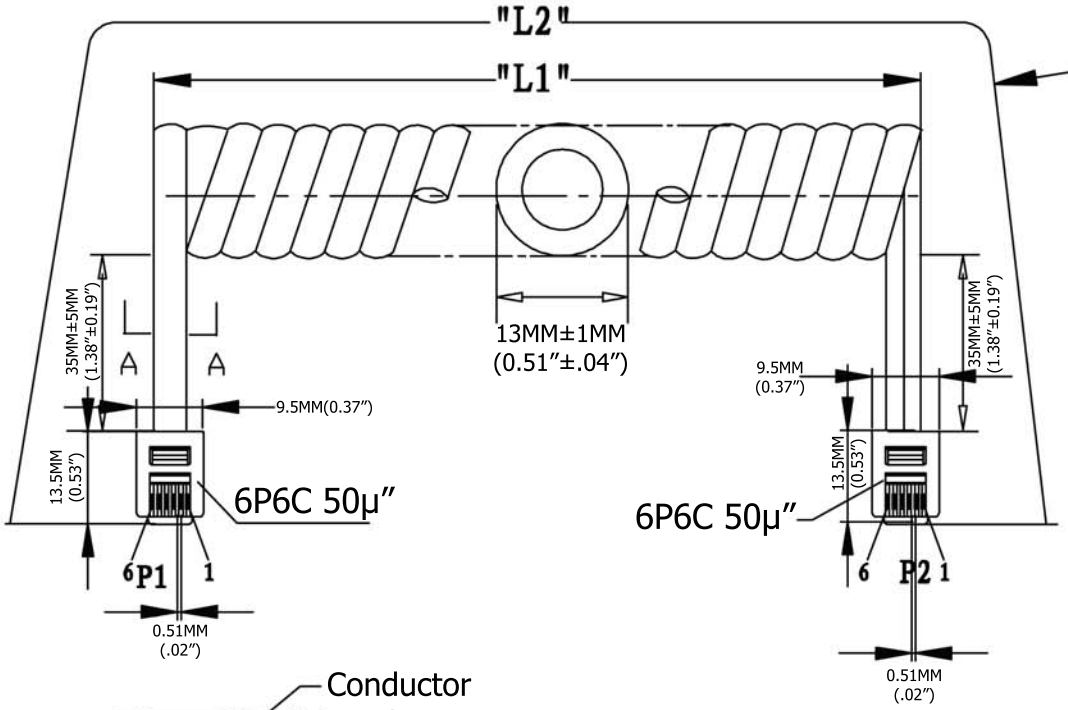

Extended length is with 500g of force

Materials:

- Plug Housing: Polycarbonate, clear
- Plug Terminal: 0.36"[.014MM] Thick Phosphor Bronze
- Connector: 50μ" of Selective Gold Contact Plating
  - Area, Gold flash over the remainder
  - Over 2.54μm[.000100] thick nickel underplate
- Conductor(X4C): 26AWG (0.12X12) Bare Copper
- Insulation(X4C): PP6331 ID 0.95-1.0
- Jacket: PVC NOUL 80P
- Package: Individual PE Bag

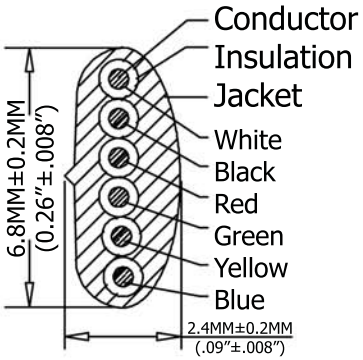

SEC: A=A

P1		P2
1	WHITE	1
2	BLACK	2
3	RED	3
4	GREEN	4
5	YELLOW	5
6	BLUE	6

Extended Length ("L2")	Typical Retracted Length ("L1")
120.0 Inches - 138.0 Inches	39.5 Inches
3,048.0MM-3,505.2MM	1,003.3MM

RoHS Compliant

ITEM NO

AT-C-26-6/6/B-10/R-R

TITLE NON-UL 26AWG (0.16/7)*6C, O.D.: 2.4*6.8MM
Reverse Plug, 50μ" of contact plating, BLACK

ASSMANN Electronics, Inc.
1840 W. Drake Drive, Suite 101 - Tempe, AZ 85283
Toll Free: 1-877-277-6266 Email: info@usa-assmann.com

THIS DRAWING IS UNPUBLISHED
©Copyright 2009 by Assmann Electronic Components
All International Rights Reserved