MICRO SWITCH
FREEPORT ILLINOIS, U.S.A
A DIVISION OF HONEYWELL
FED. MFG. CODE 91929

ASSEMBLY – SWITCH

CATALOG LISTING
7AC7

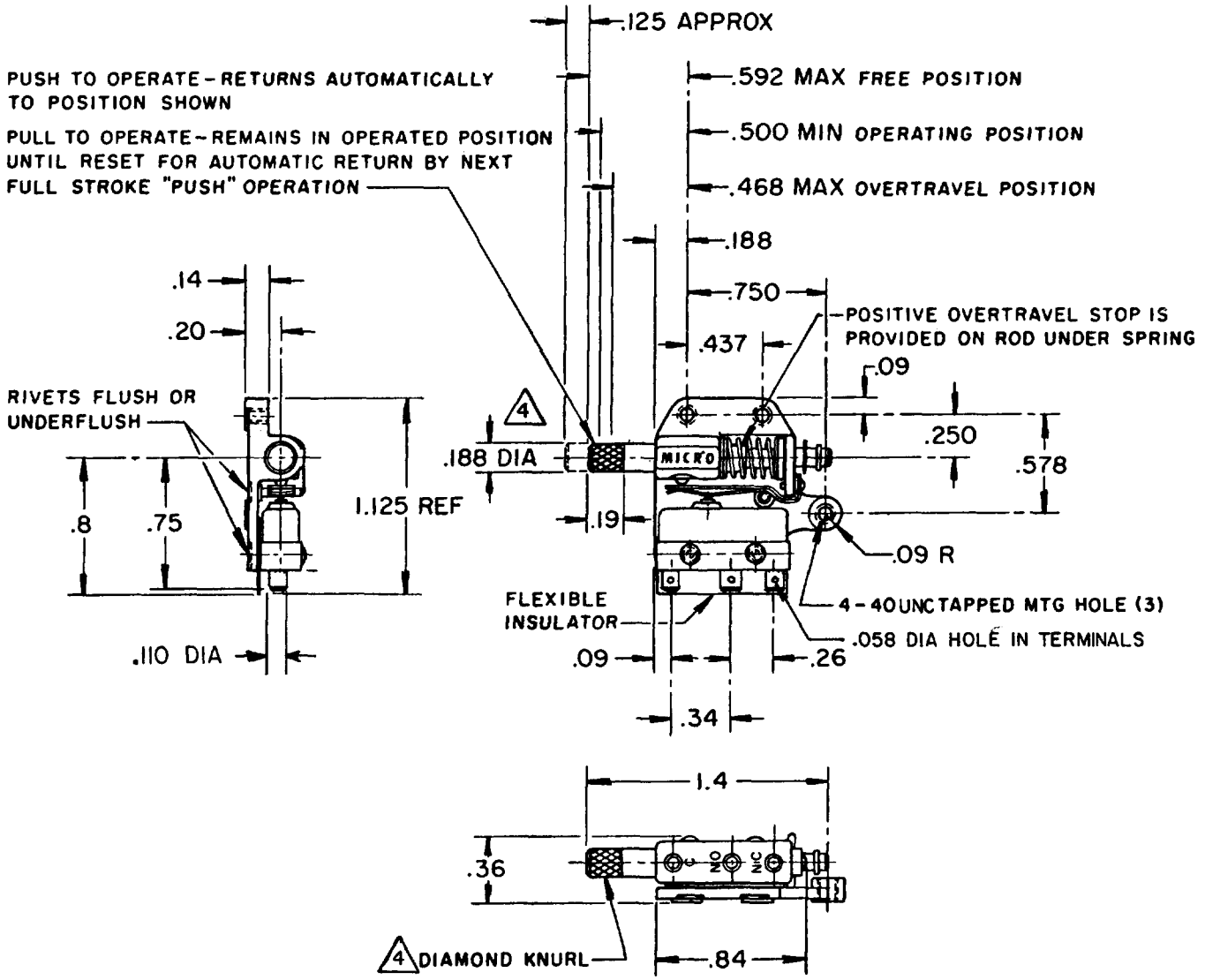

NOTES
1 – SWITCH WILL WITHSTAND 250° F
2 – UNIT INCLUDES CAT. LIST. ISM3 BASIC SWITCH (1)
3 – TERMINALS ARE PLATED FOR SOLDERING
4 .204 MAX DIA OVER KNURL

THIS DRAWING COVERS A PROPRIETARY ITEM AND IS THE PROPERTY OF MICRO SWITCH, A DIVISION OF HONEYWELL. THIS DRAWING IS NOT TO BE COPIED OR USED WITHOUT THE APPROVAL OF MICRO SWITCH.

THIRD ANGLE PROJECTION

CHARACTERISTICS

TOTAL TRAVEL
.156 APPROX PUSH DIRECTION
.125 APPROX PULL DIRECTION

OVER TRAVEL – – – – – – – – – – – – .090 MIN

OPERATING FORCE AND FULLY DEPRESSED FORCE
5 LB MAX

ELECTRICAL DATA

CONTACT ARRANGEMENT
S P D T

250 VAC – – – – – – – – – – – – – – – 5 AMP

30 VOLTS DC RATING
INDUCTIVE – – – – SEA LEVEL – – 3 AMP
50,000 FT – – 2.5 AMP
RESISTIVE – – – – SEA LEVEL – – 5 AMP
50,000 FT – – – 5 AMP
MAXIMUM INRUSH – – – – – – – – – 24 AMP

SCALE FULL

DO NOT SCALE PRINT

TOLERANCES
APPLY TO DESIGN UNITS. CONVERSIONS ARE ONLY FOR REFERENCE. UNLESS NOTED, TOLERANCES ARE ±

	DIM. mm	TOL. mm/in	DIM. in	TOL. mm/in
NO PLACES	X	1/.04		
ONE PLACE	X.X	0.4/.016	X X	0.8/.03
TWO PLACES	X.XX	0.15/.006	X XX	0.38/.015
THREE PLACES			X XXX	0.13/.005
ANGLES				

DESIGN UNITS SI METRIC ☐ US CUSTOMARY ■

WEIGHT

CATALOG LISTING 7AC7 PAGE 1 OF 1
RELEASE NO. PR-6623
REPLACES
ISSUE M 5
CHECK

REVISIONS

A	PR6623	S L B 29 JULY 77
B	OBS CO-52202	RJH 6 APR 83
C	RE-INST PR-12039	KAG 6 APR 83
D	206571	CSL 4 OCT 02

CHECK 3 AUG 77
CHECK GLH
CHECK 29 JULY 77
DRAWN SLB
RASTER
FO-52848-A