MICRO SWITCH
a Honeywell Division
FED. MFG. CODE 91929

SWITCH - ENCLOSED

CATALOG LISTING
1EN367

U.S. ARMY DRAWING
19207-12298141

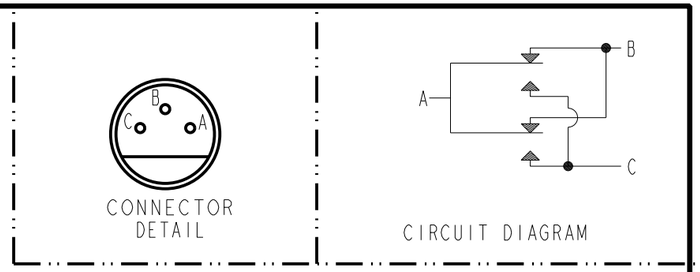

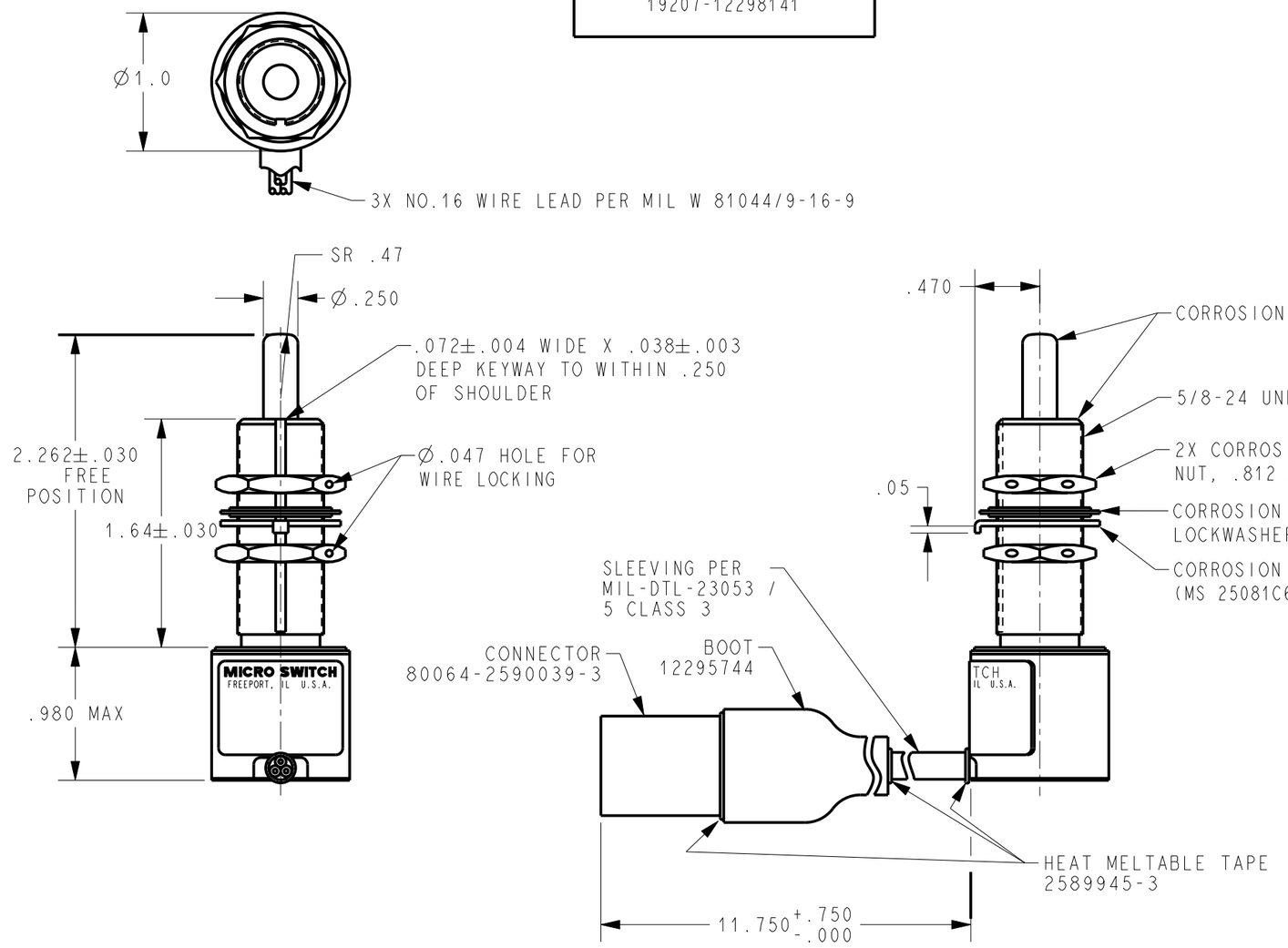

THIS DRAWING COVERS A PROPRIETARY ITEM AND IS THE PROPERTY OF MICRO SWITCH, A DIVISION OF HONEYWELL. THIS DRAWING IS NOT TO BE COPIED OR USED WITHOUT THE APPROVAL OF MICRO SWITCH

THIRD ANGLE PROJECTION

SCALE FULL

DO NOT SCALE PRINT

UNLESS OTHERWISE SPECIFIED TOLERANCES ARE

ONE PLACE	(.0)	±.030
TWO PLACE	(.00)	±.015
THREE PLACE	(.000)	±.005
ANGLES		±

WEIGHT

ANSI Y14.5M-1982 APPLIES

CHARACTERISTICS

OPERATING FORCE ---------- 4-8 LBS
FULL OVERTRAVEL FORCE ------ 30 LBS MAX
RELEASE FORCE ---------- 3 LBS MIN
PRETRAVEL ---------- .040 MAX
DIFFERENTIAL TRAVEL -------- .020 MAX
OVERTRAVEL ---------- .500 MIN

ELECTRICAL DATA

CONTACT ARRANGEMENT
S P D T

LOAD	28 VDC	
	SEA LEVEL	50,000 FT
RES	4	4
IND	2	2
MOTOR	4	

NOTES
1 - CORROSION RESISTANT STEEL ENCLOSURE
2 - SWITCH SEALED PER MIL-PRF-8805 SYMBOL 4
3 - CIRCUIT DIAGRAM, CUSTOMER PART NUMBER, MFR 80212 AND LISTING ARE SHOWN ON NAMEPLATE
4 - COINCIDENCE OF OPERATING AND RELEASING POINTS: .010 OF PLUNGER TRAVEL
5 HARDWARE MAY BE PACKAGED UNASSEMBLED PER MIL-PRF-8805

CATALOG LISTING 1EN367
PAGE 1 OF 1
RELEASE NO. PR-9220-T
REPLACES -
ISSUE 12
CHECK
REVISIONS
A C096063 TSM 22FEB00
B 0001639 JAH 28OCT03
CHECK
22FEB00
SAV
CHECK
22FEB00
DRAWN TSM
PTC/CAD 2D