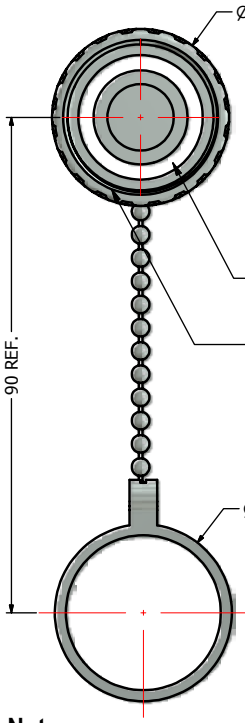

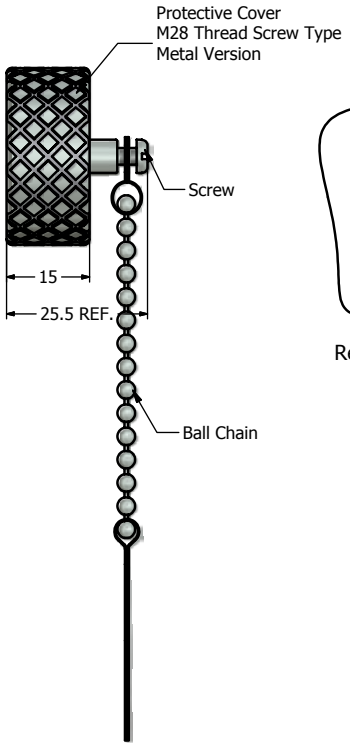

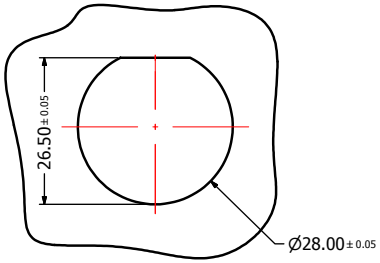

Recommended Panel Cutout (c)

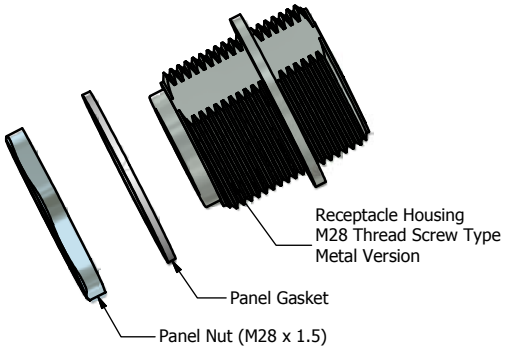

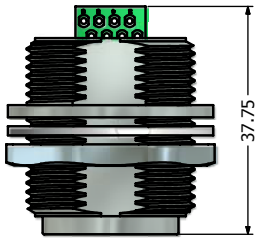

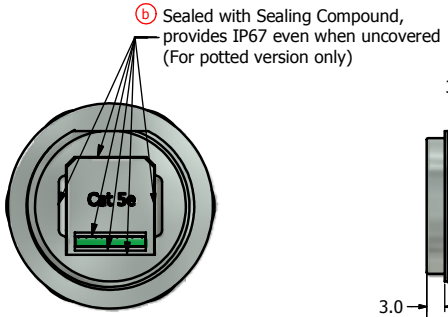

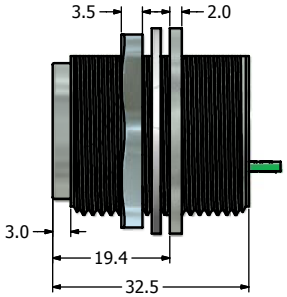

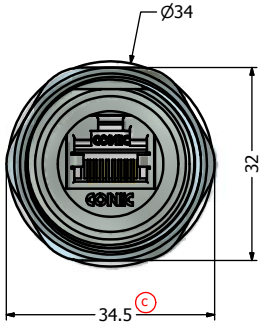

Notes:

1. Electrical Specifications:
   - Meets EIA/TIA-568-B.2 Cat.5e Specification
   - Contact Resistance: 20mOhm max.
   - Insulation Resistance: 500MOhm min. @ 100 VDC
   - Current Rating: 1.2A max. at 25˚C
   - Working Voltage: 100 VDC
   - DWV: 1000 VDC/60s Contact to Contact, 1500 VDC/60s Contact to Metal Shell
   - Operating Temperature: -40˚C to +85˚C
2. Material and Finish:
   - Receptacle Housing, Metal Cover, Panel Nut: Brass, Nickel Plated
   - Ball Chain: Copper Alloy, Nickel Plated
   - Panel Gasket: Silicon, Color: White
   - Cover Gasket: Silicon, Color: Red
   - RJ45 PCB Jack Metal Shell: Copper Alloy, Nickel Plated
   - RJ45 PCB Jack Plastic Housing: Glass filled PBT UL94 V-0, Color: Black
   - RJ45 PCB Jack Contacts: Phosphor Bronze, Finish: 50u" Gold min. over Nickel
3. Connector can be front or rear mounted to a maximum panel thickness of 3.2mm.
4. IP67 rated when fully mated with appropriate mating connector
5. RoHS compliant

Directive 2002/95/EC RoHS Compliant

Description	Part Number
Metal Version Receptacle with Shielded RJ45 PCB Jack + Cover Assembly	17-101654
Potted Metal Version Receptacle with Shielded RJ45 PCB Jack + Cover Assembly	17-101674

THIS DRAWING MAY NOT BE COPIED OR REPRODUCED IN ANY WAY, AND MAY NOT BE PASSED ON TO A THIRD PARTY WITHOUT WRITTEN PERMISSION. OWNERSHIP AND COPYRIGHT OF CONEC CORPORATION

DO NOT ALTER CAD DRAWING BY HAND

Customer:

Name	Title	Approval Date

Rev.	Changes	Date	Name
c		Mar/08/2011	Vincent ke
b		Aug/26/09	Vincent ke
a	original		

Tolerance
Unless otherwise specified
0 PLC ±0.50
1 PLC ±0.38
2 PLC ±0.25
3 PLC ±0.10
ANGLES ±3°

2009	Date	Name
Draw.	Jun. 05	Vincent Ke
Appd.	Jun. 05	J. Chaudry
Norm		
D-old		

Autodesk Inventor

CONEC®

Scale: 1.2:1

Dim. in mm

Material: See Notes

Title: Receptacle + Cover Assembly Kit with Cat. 5e RJ45 PCB Jack Metal Version

Drawing No.: 17K1A252

DIN A3

Part No.: SEE P/N TABLE

Sheet 1/1