POS.	A	B	C	D	E	F	Part NO.
9	30.80	16.30	25.00	19.20	11.08	8.31	**DLS1XS4AA39X**
15	39.20	24.60	33.30	27.70	19.39	16.62	**DLS2XS4AA39X**
25	53.10	38.30	47.10	41.10	33.24	30.47	**DLS3XS4AA39X**
37	69.40	54.80	63.50	57.30	49.86	47.09	**DLS4XS4AA39X**

used for: D-SUB

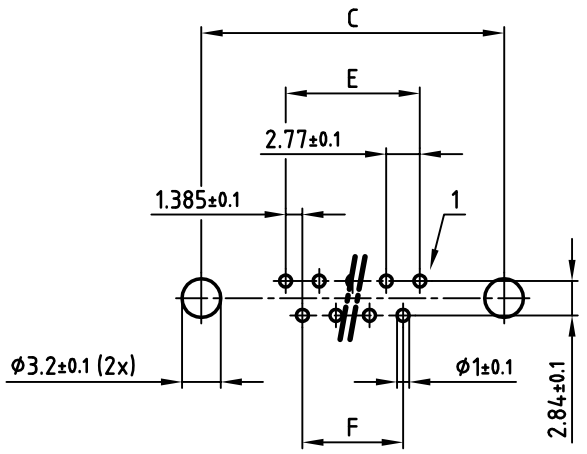

P.C.B. HOLE DRILLINGS

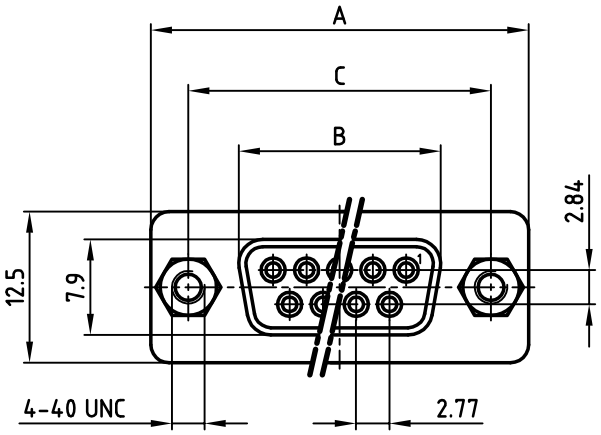

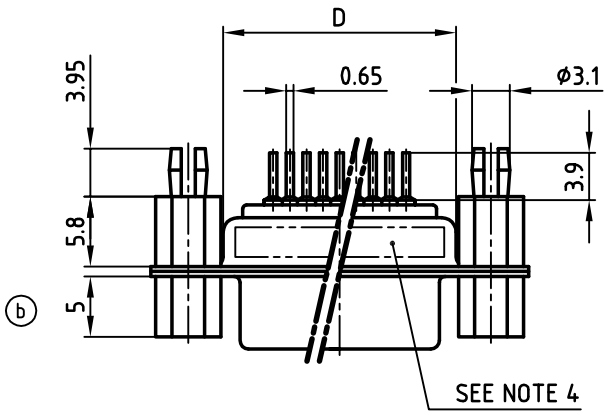

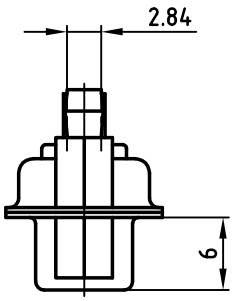

NOTES:

1. METALSHELLS: STEEL; min. 320µ" TIN
2. INSULATORS: PBT GF UL 94 V-0, BLACK
3. CONTACTS: COPPER ALLOY
   PLATING: 8µ" HARD GOLD OVER min. 50µ" NICKEL
4. CONNECTOR IS PART MARKED: PART-NO. CONEC ABC

Directive 2002/95/EC „RoHS" Compliant

THIS DRAWING MAY NOT BE COPIED OR REPRODUCED IN ANY WAY, AND MAY NOT BE PASSED ON TO A THIRD PARTY WITHOUT WRITTEN PERMISSION. OWNERSHIP AND COPYRIGHT OF CONEC GmbH

DO NOT ALTER CAD DRAWING BY HAND

rev.	description	date	name
1 x b	Ä 2698	30.03.2007	ES

tolerance

2006	date	name
drawn	24.01.	Lehmenkühler
appd.	24.01.	Mickenbecker
norm	DIN 41652	
d-old		

CONEC®

scale: 2:1

material: SEE NOTES

title:

D-SUB FEMALE

9-37pos. PCB STRAIGHT STAMPED CONTACTS
rear:5.8mm snap-in/front:5.8mm open hex rivet

dwg no: 16K1A1706

AutoCAD 2004 | DIN-A 4 | sh: 1/1

product no: SEE TABLE