MATERIAL NUMBER	OLD PART NUMBER
112092-0010	TCDDN-8D0P-10U

INPUTS:
PNP 3-WIRE SENSORS
PORTS 1-8

USER MANUAL IS LOCATED ON MOLEX WEBSITE.

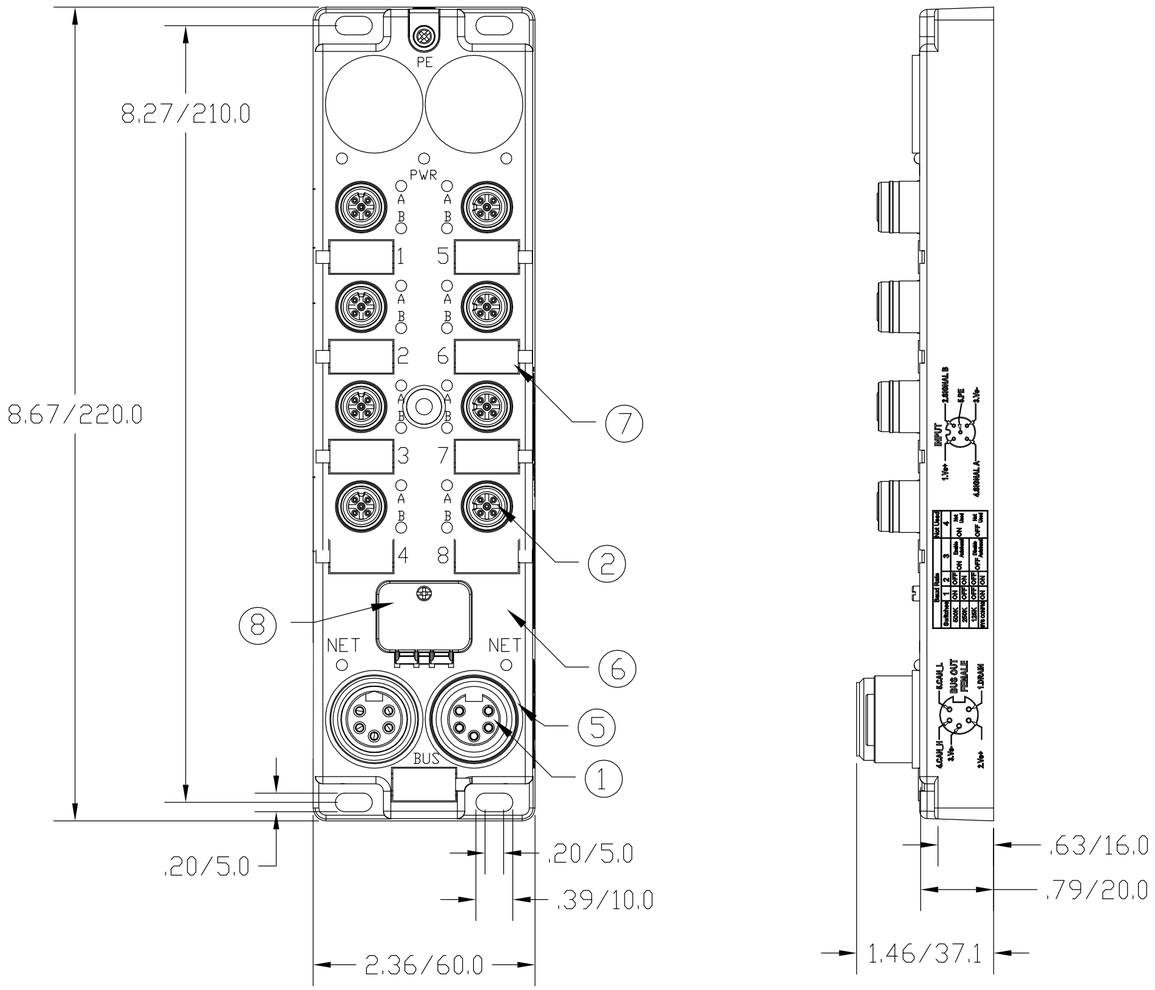

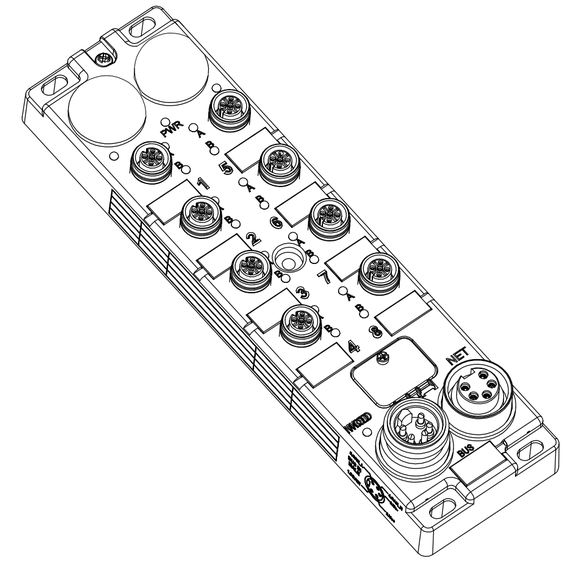

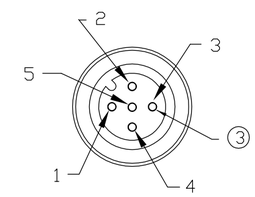

FEMALE FACE VIEW

DUAL INPUT

PIN 1 V+
PIN 2 EVEN # INPUT
PIN 3 V–
PIN 4 ODD # INPUT
PIN 5 PE

DUAL OUTPUT

PIN 1 VAUX+
PIN 2 EVEN # OUTPUT
PIN 3 VAUX–
PIN 4 ODD # OUTPUT
PIN 5 PE

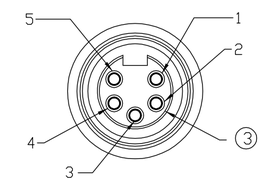

FEMALE FACE VIEW

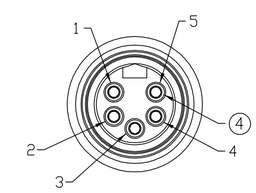

MALE FACE VIEW

PIN 1 DRAIN
PIN 2 V+
PIN 3 V–
PIN 4 CAN_H
PIN 5 CAN_L

PROTECTION	IP67
OPERATING TEMPERATURE	0°C TO 70°C
APPROVALS	ODVA AND CE
UL CERTIFICATIONS	UL LISTED FILE NO. E200650
PRODUCTS CERTIFIED BY UL IN ACCORDANCE WITH CANADIAN REQUIREMENTS	UL LISTED FILE NO. E200650

ITEM	COMPONENT	MATERIAL	FINISH
1	MINI INSERT	TPE	GRAY(5-POLE) YELLOW (4-POLE)
2	MICRO INSERT	NYLON 6/6	BLACK
3	CONTACT SOCKET	COPPER ALLOY	GOLD OVER NICKEL
4	CONTACT PIN	COPPER ALLOY	GOLD OVER NICKEL
5	RECEPTACLE SHELL	BRASS	NICKLE PLATED
6	HOUSING	PBT	BLACK
7	LABEL	ABS	WHITE
8	WINDOW	POLYCARBONATE	CLEAR

RLSD DRAWING
EC NO: WNA2009-0881
DRWN: BWOODMAN 6/30/09
CH'KD: ---
APPR: JFMURPHY 2009/07/08
DESCRIPTION
REV A

QUALITY SYMBOL
▼=0
C=0

GENERAL TOLERANCES (UNLESS SPECIFIED)

	mm	INCH
4 PLACES	±----	±----
3 PLACES	±----	±----
2 PLACES	±----	±.01
1 PLACE	±0.3	±----
ANGULAR ±----°		

DRAFT WHERE APPLICABLE MUST REMAIN WITHIN DIMENSIONS

DIMENSION STYLE: IN/MM
SCALE: ----
DESIGN UNITS: ----
THIRD ANGLE PROJECTION

DRAWN BY: BW DATE: 2009/06/30
CHECKED BY: LH DATE: 2009/06/30
APPROVED BY: ---- DATE: ----

TITLE: 60MM 16 INPUT PNP DEVICENET MPIS
---

molex MOLEX INCORPORATED

MATERIAL NO.: SEE CHART
DOCUMENT NO.: SD-112092-003
SHEET NO.: 1 0F 1
SIZE: C

THIS DRAWING CONTAINS INFORMATION THAT IS PROPRIETARY TO MOLEX INCORPORATED AND SHOULD NOT BE USED WITHOUT WRITTEN PERMISSION