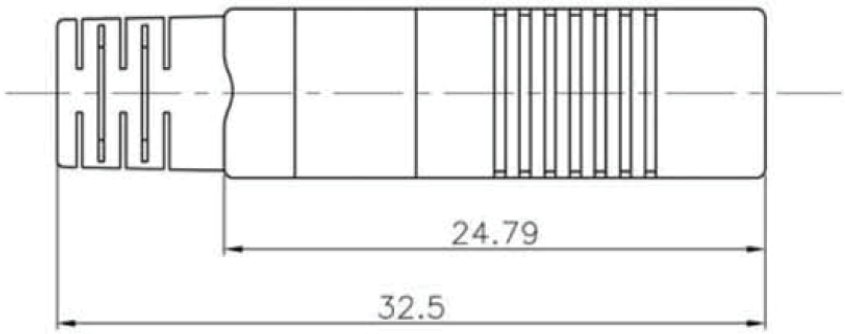

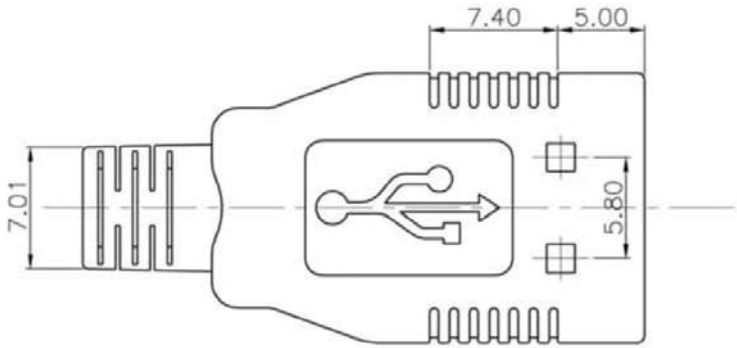

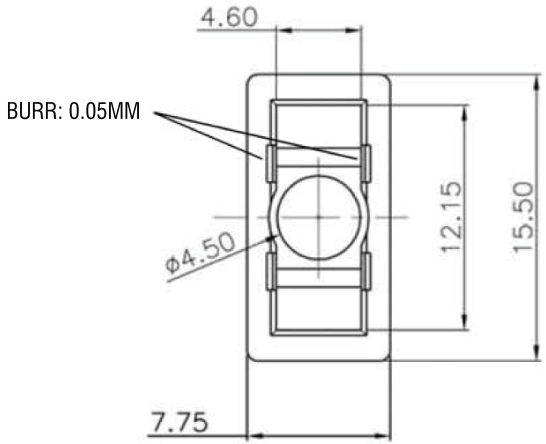

Materials:

- Material: PVC
- Color: Black

RoHS Complaint

Scale	1:1
TOLERANCE	
X.X	±0.40
X.XX	±0.25
X.XXX	±0.15
Angle	±3°

Modification	Date	Name

		Name
Drawn	10.19.11	Chappell
Approved		

ASSMANN WSW components

Item No. A-USBPA-HOOD-BLK-R

Title Hoods USB-Assembly, Type A, Male, Black

Drawing No.

rev00

Replace

Sheet